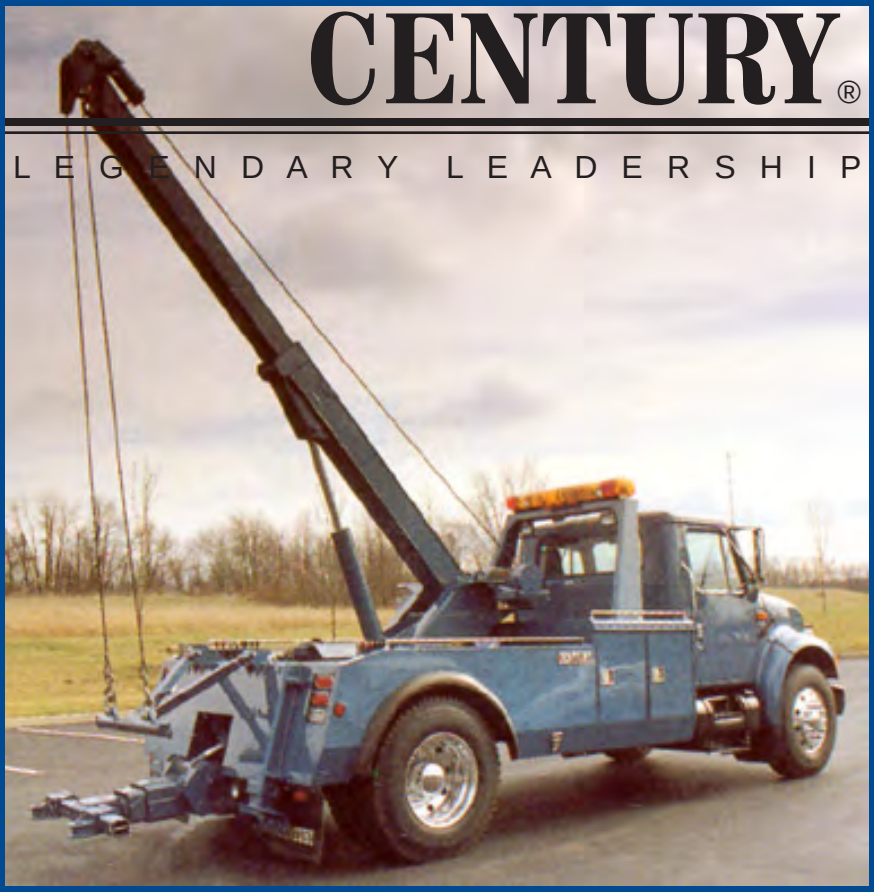

OWNER'S MANUAL

820 WRECKER / FIIIT

INSTALLATION, OPERATION, MAINTENANCE & PARTS

NOTE: MANUAL including SPECIFICATIONS, subject to change without notice
All ratings specified are based on structural factors only,
not vehicle capacities or capabilities.

CENTURY®
Miller Industries Towing Equipment Inc.
8503 Hilltop Drive
Ooltewah, Tennessee 37363
Phone (423) 238-4171 • FAX (423) 238-5371

FORM NO. 0500724
02 / 97
PRICE $25.00

LIMITED WARRANTY

MILLER INDUSTRIES TOWING EQUIPMENT INC., hereinafter referred to as MILLER, warrants to the original purchaser that each new MILLER wrecker or other MILLER products will be free from defects in material and workmanship for a period of twelve (12) months from date placed in service, but in no event shall such warranty period exceed twenty-four (24) months from date of manufacture by MILLER. The purchaser must promptly notify MILLER in writing of any failure in material or workmanship. In no event shall MILLER accept such notification later than twenty-four (24) months from date of delivery or twelve (12) months from date placed in service, whichever is earlier.

MILLER's obligation under this warranty, statutory or otherwise, is limited to the repair or replacement at the MILLER factory, or at a point designated by MILLER, of such part or parts as shall appear upon inspection by MILLER to be defective in material or workmanship. New or remanufactured parts will be used for any replacement at MILLER's option. This warranty is not transferable. This warranty does not obligate MILLER to bear the cost of labor or transportation charges in connection with the repair or replacement of any parts found to be defective, nor shall it apply to a product upon which repairs or alterations have been made unless authorized by MILLER.

EXCEPT AS EXPRESSLY SET FORTH IN THIS WARRANTY, MILLER MAKES NO OTHER WARRANTY, EXPRESS OR IMPLIED, AND HEREBY DISCLAIMS ALL OTHER WARRANTIES INCLUDING, BUT NOT LIMITED TO, THE IMPLIED WARRANTIES OF MERCHANTABILITY AND FITNESS FOR A PARTICULAR PURPOSE. MILLER shall in no event be liable for claimed downtime, claimed loss of profits or goodwill, or any other special, incidental, indirect, or consequential damages concerning or relating to any product or parts, whether based on negligence, strict liability, breach of contract, breach of warranty, misrepresentation or any other legal theory, regardless of whether the loss resulted from any general or particular requirement which MILLER knew or had reason to know about at the time of sale.

MILLER MAKES NO WARRANTY, EXPRESS OR IMPLIED, AS TO THE FINISHED PRODUCTS MANUFACTURED OR SUPPLIED BY ANOTHER MANUFACTURER AND SUPPLIED BY MILLER TO PURCHASER, including, but not limited to, any vehicle to which a MILLER product may be affixed or any accessories or wire rope, and MILLER EXPRESSLY DISCLAIMS ANY IMPLIED WARRANTIES OF MERCHANTABILITY OR FITNESS FOR A PARTICULAR PURPOSE AS TO SUCH EQUIPMENT OR PRODUCTS. This language shall in no way affect or diminish the rights of the purchaser to rely on such warranties as are extended by such manufacturers or suppliers. MILLER shall, to the extent permitted under applicable law, pass on to the purchaser such manufacturer's or seller's warranty.

MILLER, whose policy is one of continuous improvement, reserves the right to improve its products through changes in design or materials as it may deem desirable without being obligated to incorporate such changes in products previously sold. This warranty is not intended to cover or include the following items, which are set forth by way of example and not limitation:

A. Normal deterioration of trim, paint, lettering, and appearance items due to wear or exposure to weather, road conditions, road treatments, etc.
B. Any damage or defect due to accident, misuse, abuse, improper or unauthorized repairs, failure to provide reasonable and necessary maintenance, or uses for which the equipment was not designed or intended.
C. Alterations or modifications that affect performance, operation or reliability.
D. Normal maintenance parts including, but not limited to, wear pads, bushings, wire rope, mud flaps, fenderettes, light bulbs, hydraulic oil, filters, and tow sling belts.

IT IS EXPRESSLY UNDERSTOOD THAT MILLER MAKES NO IMPLIED WARRANTY THAT MILLER PRODUCTS SHALL BE FIT FOR THE PURPOSE OF LIFTING OR MOVING PEOPLE OR FOR ANY OTHER IMPROPER USE.

Miller Industries Towing Equipment Inc.
8503 Hilltop Drive
Ooltewah, Tennessee 37363

Telephone (423) 238-4171

SERIAL NUMBER

OWNER, USER AND OPERATORS:

CENTURY appreciates your choice of our wrecker for your application. Our number one priority is user safety which is best achieved by our joint efforts. We feel that you can make a major contribution to safety if you, as the equipment owner and operator:

1. **Comply with Federal, State, and Local Regulations.**
2. **Read, Understand, and Follow the Instructions in this Manual.**
3. **Use Good, Safe Work Practices in a Common Sense Way.**
4. **Only have Authorized and Trained Operators running the Wrecker.**

Also contained in this manual is a Parts Section for your Wrecker. Use of other than Factory or Factory Authorized Parts will render the Warranty void.

TABLE OF CONTENTS

WARNING

The operator must read and understand all instructions in this manual before operating the wrecker.

It is assumed by CENTURY that the Owner/Operator has thorough knowledge of the accepted and lawful retrieval and towing methods as dictated by his city, county, or state. CENTURY rejects any liability claim that may result from the incorrect or unlawful application of its equipment.

Section I - SAFETY PRECAUTIONS . . . . . I-1 thru I-15

Section II - SPECIFICATIONS . . . . . II-1 thru II-6

Section III - OPERATIONAL FUNCTIONS

WRECKER . . . . . III-1 thru III-5
WHEEL LIFT . . . . . IIIA-1 thru IIIA-4

Section IV - OPERATING INSTRUCTIONS

WRECKER . . . . . IV-1 thru IV-8
WHEEL LIFT . . . . . IVA-1 thru IVA-20

Section V - MAINTENANCE . . . . . V-1 thru V-11

MAINTENANCE RECORD . . . . . V-7 thru V-11

Section VI - PARTS

BODY ASSEMBLY . . . . . VI-2 & VI-3
FORMULA IIIT ASSEMBLY . . . . . VI-4 & VI-5
FORMULA IIIT HYDRAULICS . . . . . VI-6 & VI-7
OUTER CROSSTUBE & LIFT ADAPTERS . . . . . VI-8 & VI-9
WRECKER ASSEMBLY . . . . . VI-10 & VI-11
BOOM ELEVATION HYDRAULICS VI-12

TABLE OF CONTENTS (cont'd)

Section VI - PARTS (cont'd)

BOOM EXTENSION HYDRAULICS VI-13
PUMP & FILTER HYDRAULICS . . . . . VI-14 & VI-15
CONTROLS & CROSSRODS . . . . . VI-16 & VI-17
WINCH ASSEMBLY . . . . . VI-18 & VI-19
BOOM END SWIVEL ASSEMBLY VI-20
HYDRAULIC CYLINDERS
WRECKER VI-21
FORMULA III . . . . . VI-22 & VI-23
REAR JACK HYDRAULICS VI-24
WINCH MOTOR HYDRAULICS VI-25
LIGHTBAR ASSEMBLY VI-26
LIGHT KIT . . . . . VI-27 thru VI-29
GLAD HAND ASSEMBLY VI-30
HEAVY DUTY TRUCK HITCH VI-31
AIR OPERATED FREE SPOOL . . . . . VI-32 & VI-33
KING PIN ASSEMBLY VI-34

Section VII - INSTALLATION . . . . . VII-1 thru VII-9

Section VIII - SCHEMATICS

ELECTRICAL VII-1
HYDRAULIC VII-2

NOTES

Section I - SAFETY PRECAUTIONS

Presented in the interest of safety for all towing and recovery unit operators.

NOTICE

You are obligated to operate your towing and recovery unit safely.
You can be held legally responsible for injuries or damages resulting from unsafe operating practices.
The manufacturer's recommendations for operating this towing and recovery unit can help you avoid unsafe practices and their bad consequences. These recommendations are contained in this manual.
Century is not responsible for the results of any unsafe practice of towing and recovery unit operators.
Furthermore, the division is not responsible for the failure of the towing and recovery unit or its accessories resulting from improper maintenance.

The danger from an vehicle does not cease when it is disabled or wrecked. Recovering and towing vehicles can be dangerous, too! The danger threatens towing and recovery unit operators and everyone close at hand. As a towing and recovery unit operator you must develop an awareness of the hazards involved. You must use every safeguard within reason to prevent injuries.

For each step in operating your towing and recovery unit develop the habit of asking yourself if it is safe to proceed. Carefully check all rigging (especially snatch blocks) before starting a heavy lift or pull.

We cannot warn you of all the possible dangers you will encounter. But we will tell you of the most common hazards we know about. Learn them well.

Section I - SAFETY PRECAUTIONS (cont'd)

1.1 Improper use of this equipment can be dangerous! Incorrect operation can result in bodily injury to the operator and bystanders. Therefore, a thorough understanding of the "operating principles" and "operating instructions" as found in this manual is essential.

1.2 Study each job to be done. Apply common sense judgment to assure safety to yourself and bystanders.

1.3 Plan ahead. Work safely. Avoid accidental damage and injury. If an accident or fire does occur, react quickly with the tools and skills at hand. Know how to use a first aid kit and a fire extinguisher - and where to get assistance.

1.4 Read and understand the following instructions.

WARNING

1. READ THE MOUNTING / OPERATING / MAINTENANCE MANUAL FOR WARNINGS AND PRECAUTIONS.

2. NEVER TAKE ANYTHING FOR GRANTED. DON'T ASSUME THAT EVERYTHING IS ALL RIGHT AT THE START OF WORK TODAY JUST BECAUSE EVERYTHING SEEMED ALL RIGHT AT THE END OF WORK YESTERDAY. BEFORE BEGINNING OPERATION, THOROUGHLY INSPECT THE ENTIRE UNIT TO BE SURE IT IS IN GOOD OPERATING CONDITION.

3. VISUALLY INSPECT THE UNIT FOR EVIDENCE OF PHYSICAL DAMAGE, SUCH AS CRACKING, BENDING, OR DEFORMATION OF PLATES OR WELDS. INSPECT CAREFULLY FOR CRACKING OR FLAKING OF PAINT, WHICH MAY INDICATE A DANGEROUS CRACK IN THE STRUCTURE BENEATH. DO NOT OPERATE UNTIL REPAIRS ARE MADE.

4. LOOSE OR MISSING HARDWARE, BOLTS, NUTS, AND PINS SHOULD BE PROPERLY TIGHTENED OR REPLACED WITH MANUFACTURER'S SPECIFIED HARDWARE.

5. CHECK FOR FLUID LEAKS. HYDRAULIC SYSTEM LEAKS MUST BE CORRECTED BEFORE THE UNIT IS OPERATED. INSPECT ALL HYDRAULIC HOSES, ESPECIALLY THOSE WHICH FLEX OR

MOVE IN SERVICE, AND REPLACE IF NECESSARY. SECURE ALL CAPS AND FILLER PLUGS FOR ALL SYSTEMS.

6. YOUR CLOTHING SHOULD BE RELATIVELY CLOSEFITTING.

7. ALWAYS WEAR PROTECTIVE ITEMS SUCH AS SAFETY GLASSES, GLOVES, REFLECTIVE CLOTHING AND SAFETY SHOES.

8. BEFORE OPERATING THE BOOM, REFER TO THE BOOM CAPACITY LABELS ON THE BOOM AND INSIDE OF THE DOOR OF THE CAB AND IN THE SPECIFICATION SECTION OF YOUR OPERATING MANUAL. FOR CHASSIS CAPACITY CONSULT YOUR TRUCK DEALER. NEVER EXCEED MANUFACTURER'S LOAD RATING. THE STIPULATIONS PERTINENT TO THESE RATINGS SHALL ALWAYS BE CAREFULLY OBSERVED.

RATINGS SHOWN ARE BASED ON THE HYDRAULIC, MECHANICAL, OR STRUCTURAL DESIGN OF THE UNIT RATHER THAN STABILITY. IT IS ALWAYS UNSAFE TO APPLY ANY LOAD WHICH IS GREATER THAN RATED LOAD SHOWN ON THE DATA PLATE.

9. DO NOT USE THIS EQUIPMENT EXCEPT ON SOLID, LEVEL SURFACE WITH STABILIZERS PROPERLY EXTENDED AND TRUCK BRAKES LOCKED.

10. OPERATE ALL CONTROLS SLOWLY AND SMOOTHLY TO AVOID DAMAGE TO UNIT OR INJURY TO PERSONNEL.

11. DO NOT OPERATE, WALK OR STAND BENEATH BOOM OR A SUSPENDED LOAD.

12. NEVER LIFT LOAD OVER ANYONE.

13. DO NOT USE BOOM TO LIFT PEOPLE.

14. KEEP LOAD WITHIN ONE FOOT OF THE GROUND WHENEVER POSSIBLE.

15. FOR TRAVEL, BOOM MUST BE IN STOWED POSITION AND P.T.O. DISENGAGED.

WARNING

ONLY AUTHORIZED AND TRAINED PERSONNEL SHOULD BE PERMITTED TO OPERATE THIS UNIT UNSUPERVISED.

TRAINED PERSONNEL ARE THOSE WHO HAVE WORKED UNDER EXPERIENCED SUPERVISION AND HAVE PERFORMED ALL TOWING AND RECOVERY MANEUVERS, HAVE READ THE MOUNTING, OPERATING AND MAINTENANCE MANUAL, WARNINGS AND PRECAUTIONS, AND UNDERSTAND AND HAVE HAD EXPLAINED TO THEM BY THEIR EMPLOYER THE HAZARDS OF OPERATING THE UNIT. THEY MUST BE FAMILIAR WITH THE HAZARDS OF OPERATING AT A SITE WHERE ELECTRIC POWER LINES, IRREGULAR GROUND CONTOUR, WATER, ICE, MUD, OR OTHER CONDITIONS CAN INTERFERE WITH ORDINARY CAREFUL OPERATION OF THIS UNIT.

AN UNTRAINED OPERATOR SUBJECTS HIMSELF AND OTHERS TO DEATH OR SERIOUS INJURY.

CAUTION

STAND CLEAR
WHILE OPERATING REAR SPADES

WARNING

USE SAFETY CHAINS ON ALL TOWING AND LIFTING APPLICATIONS.

SAFETY TIPS

DANGER

Death or serious injury can occur when working near power lines.
Learn - beforehand - as much about your working area as possible. Be sure that exact locations of overhead power lines, and other obstructions or hazards are known.

Don't use winch cables with hooks attached by means of cable clips. Use only cables with hooks attached by means of thimbles and machine swaged terminals.
USE CABLE CLIPS ONLY IN THE EVENT OF AN EMERGENCY FIELD TEMPORARY REPAIR.
Use at least three clips spaced 3-4 inches apart and reduce the cable working limit by 20%. U-bolt of the clip should never be around the live or long end of the cable. Replace clips as soon as possible with swaged cable termination.

SAFETY TIPS

Proper technique for using wire rope clips.
USE CABLE CLIPS ONLY IN THE EVENT OF AN EMERGENCY FIELD TEMPORARY REPAIR.

RIGHT WAY

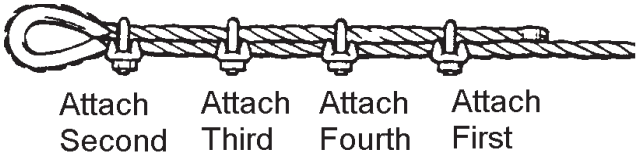

WRONG WAY

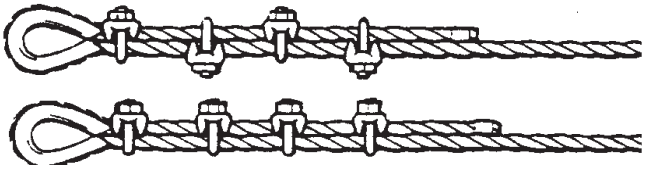

1. Turn back rope length specified in the chart. Apply first clip so U-bolt is no less than the saddle width from the dead end. Tighten nuts evenly and torque as specified.
2. Apply next clip as near loop as thimble will permit. Turn nuts on firm, but do not tighten.
3. Space additional clips as indicated so distance between clips is equal. Tighten all nuts evenly and torque as specified.
4. Apply the initial load and retighten all nuts to recommended torque. Inspect periodically and retighten as needed to the recommended torque.

CLIP SIZE (INCHES)	MINIMUM NUMBER OF CLIPS	AMOUNT OF ROPE TO TURN BACK IN INCHES	TORQUE IN FT.LBS.
3/8	2	6 1/2	45
7/16	2	7	65
1/2	3	11 1/2	65
9/16	3	12	95
5/8	3	12	95
3/4	4	18	130

This table is based on Crosby-Laughlin.

SAFETY TIPS

Don't use a towing and recovery unit that has not been properly maintained. Pay special attention to mounting bolts, cable condition, and lubrication of moving parts.

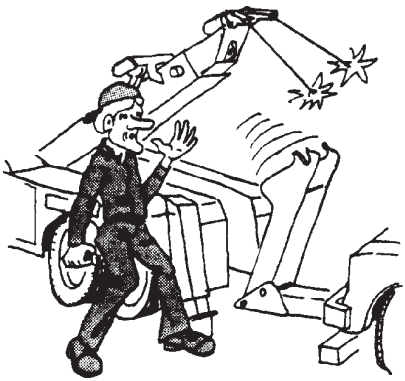

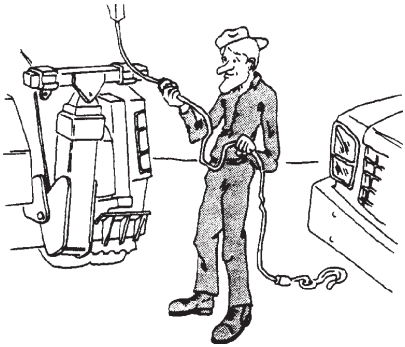

Don't use damaged cables on the unit. Become familiar with the various types of cable damage and carefully inspect all cables being used in a recovery operation before starting to pull.

Always use two safety chains when towing all vehicles, regardless of distance.

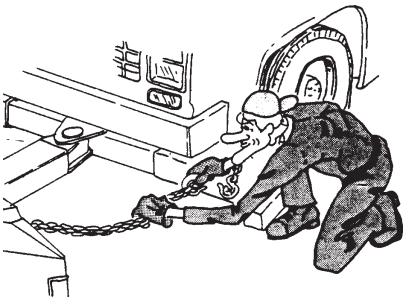

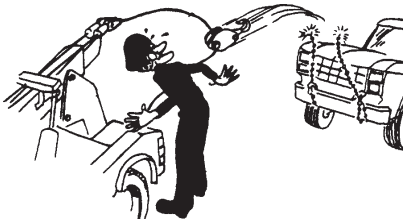

After rigging cables, don't begin pulling without rechecking connections. Make sure that all cables and snatch blocks are securely attached and cannot accidentally pull loose.

SAFETY TIPS

Don't expect the unit to tow loads equal to the boom rating. Ratings apply to loads imposed during recovery, with the unit properly stabilized.

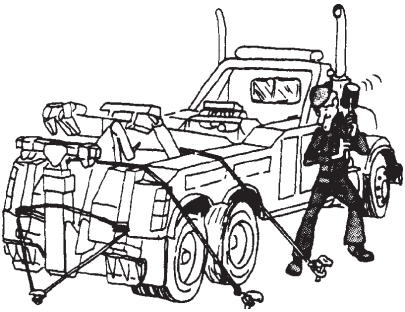

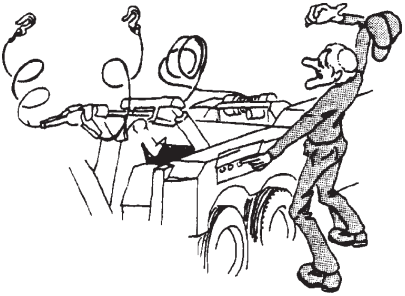

Don't pull a load with the unit without making absolutely sure that the winch drum clutch is FULLY engaged.

Don't attempt to recover heavy loads without first estimating the amount of pull that will be required. Rig to keep the estimated amount of pull well within equipment ratings.

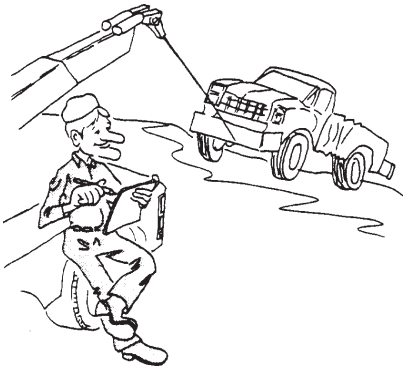

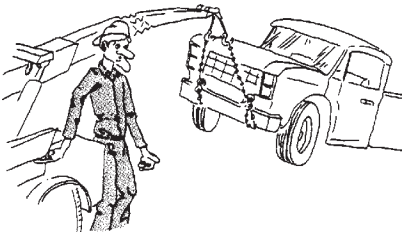

Don't exceed ratings of booms, cables, snatch blocks, or winches. Stay within data plate ratings. Note that boom ratings decrease significantly as a boom is extended.

SAFETY TIPS

Don't get under a raised vehicle or load unless it has adequate safety blocks in place.

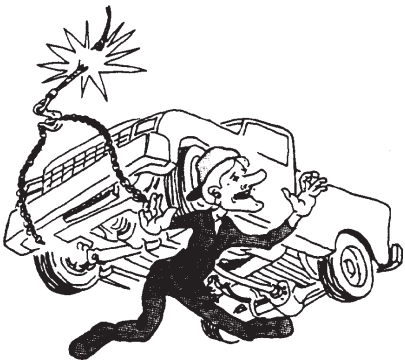

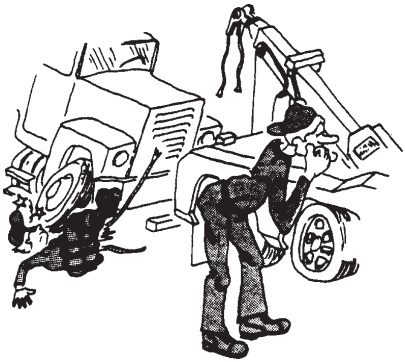

Don't exceed WORKING LIMIT ratings of cable. Use breaking strength ratings only for selecting replacement cable.

Don't tie down the front end of the unit for recovery work or heavy lifts. You are apt to damage the truck frame if you do.

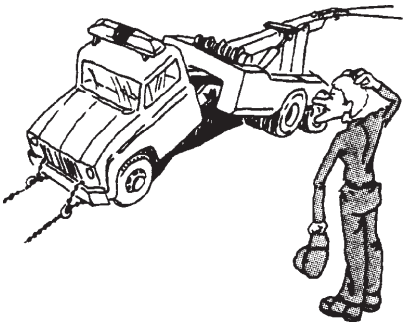

Don't disengage the winch drum clutch while the winch cable is loaded.

SAFETY TIPS

Don't lower outboard legs or rear spades unless area under them is clear. Pay particular attention to keeping this area clear.

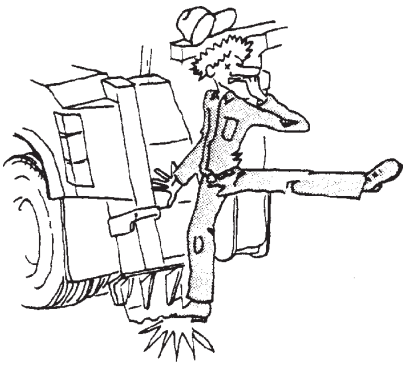

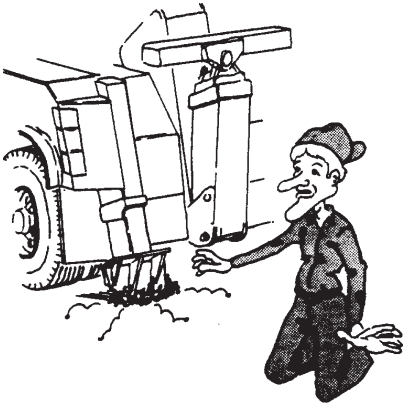

Don't use rear spades on paved surfaces unless you are willing to accept responsibility for possible damage to such surfaces.

Don't permit bystanders in the area while performing recovery work.

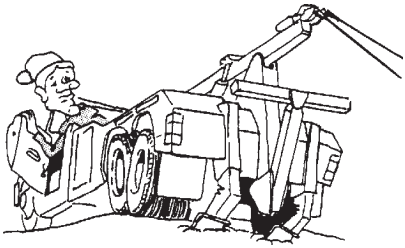

Don't move the unit while outboard legs or rear spades are extended.

SAFETY TIPS

Don't completely unwind all cable from a winch while loaded. Keep AT LEAST five wraps on the drum.

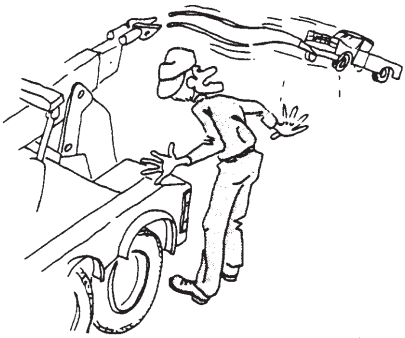

Don’t operate the unit's engine faster than recommended. Excessive speeds can damage PTO shafts, hydraulic pumps and winches.

Don’t rely on anti-theft steering locks. Use special steering wheel clamping device. Rope is commonly used to secure steering wheels, but that is not as reliable as devices designed for this purpose.

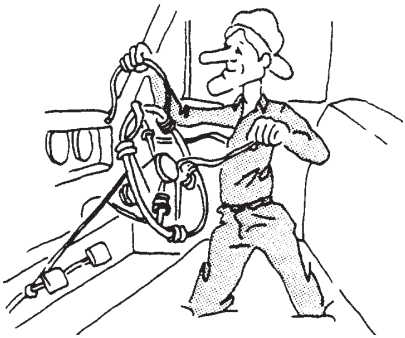

Don't tow a vehicle that reduces the weight on the front wheels of the unit more than 50 percent.

SAFETY TIPS

Don't use towing forks that are not of proper size for pick-up requirements.

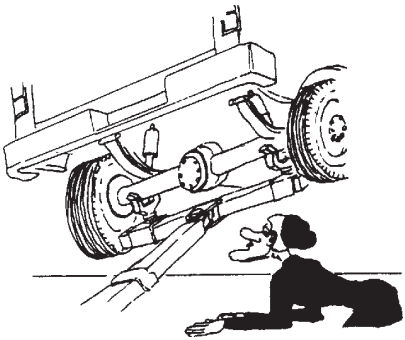

After you have hooked up a vehicle for towing, don't start the tow until you have double checked the hook-up, installed safety chains and released the parking brakes on the towed vehicle.

Don't travel with the PTO engaged. Engage it only while operating the unit controls.

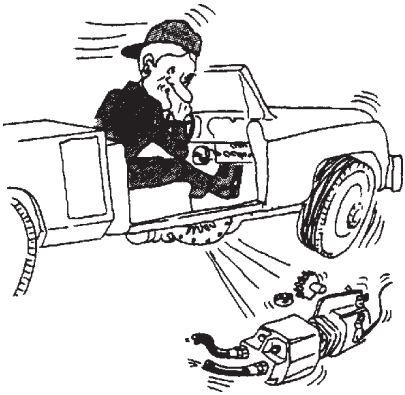

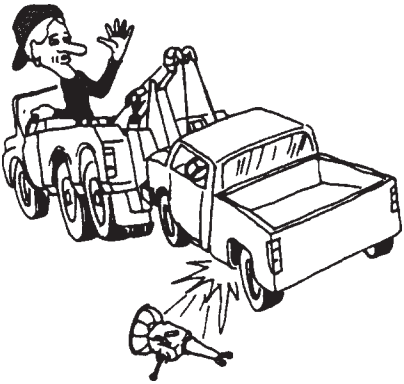

Don't tow a vehicle on its drive wheels unless steps have been taken to protect its transmission and differential. Follow the recommendations of the vehicle manufacturer. As an alternative, use a towing dolly.

SAFETY TIPS

Don't tow a vehicle on its front wheels if they are damaged.

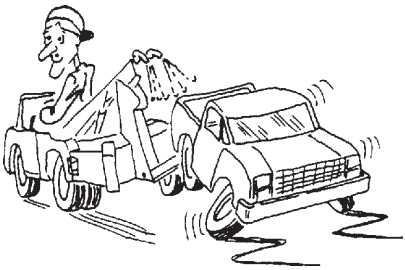

Don't tow a vehicle on its front wheels unless the steering wheel is secured with the front wheels straight ahead.

Don't tow a vehicle at night without proper signal lights on the towed vehicle and the towing unit.

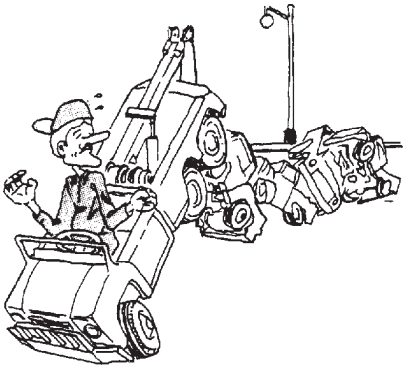

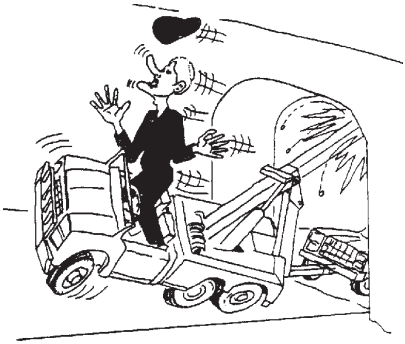

After rigging cables, don’t begin pulling without rechecking connections. Make sure that all cables and snatch blocks are securely attached and cannot accidentally pull loose.

SAFETY TIPS

Don’t move unit or extend boom where overhead power lines may be encountered.

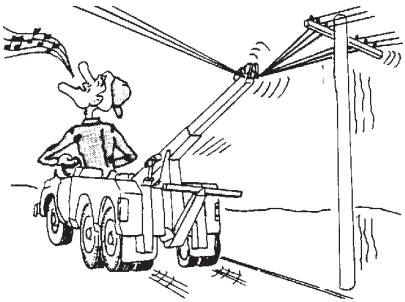

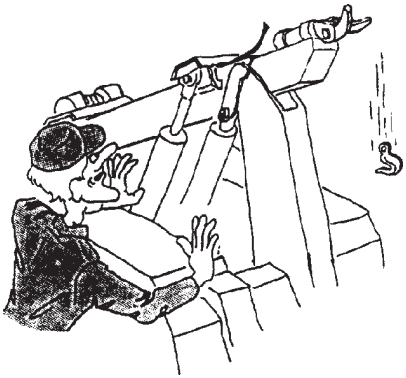

Don’t continue to wind in winch cable after the hook is against the boom end.

SAFE TOWING

There are two key factors in safe towing:

1. Have enough front axle weight for safe steering.
2. Avoid excess rear axle weight.

The issue here is safety. Unsafe steering may cause a serious accident. It is recommended that a safe steering formula that maintains at least 50 percent of the UNLADEN (unloaded) front axle weight, for towing, be used.

The formula is expressed as follows: ML = .5FAW x WB/OH
where:

ML = maximum lifted load for safe steering.
FAW = unladen (unloaded) weight at front axle.
WB = wheel base or distance between the center of the front axle to the center of the rear axle(s).
OH = overhang or distance from the center of the rear axle(s) to the lift point of the towing device.

SAFE TOWING

To use the formula, multiply the unladen weight at the front axle by .5. Multiply the result by the wheel bases. Then, divide that result by the overhang. So, you should calculate the maximum lifted load for each tow truck, using this formula, post those limits in the truck and instruct each driver to strictly observe those limits.

You should also observe gross vehicle weight ratings (GVWR), gross axle weight ratings (GAWR), and the towing equipment ratings.

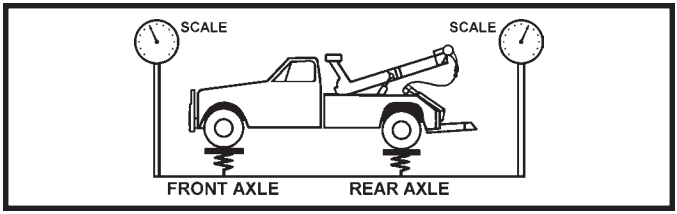

Unladen weights at front and rear axles.

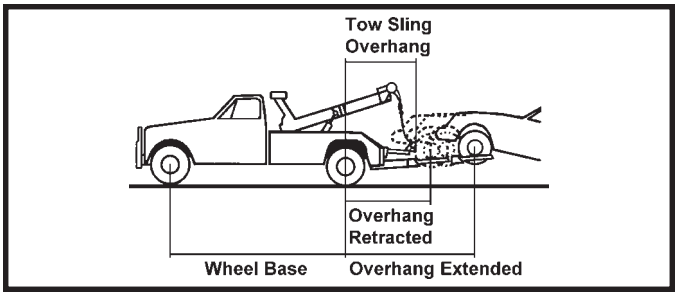

Wheel base and overhang distances for tow slings and wheel lifts.

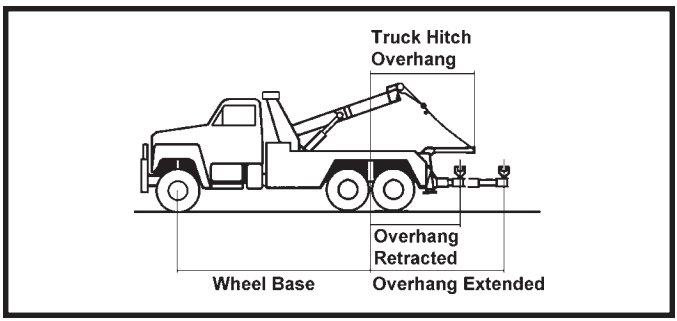

Wheel base and overhang distances for truck hitches and underlifts.

NOTES

Section II - SPECIFICATIONS

2.1 Federal law requires that the final stage manufacturer, i.e., that person or company installing new equipment on a new chassis, must certify the completed vehicle by obtaining, completing and affixing to the door post on the drivers side of the vehicle, a Certification Label similar to the one shown. See Figure 2.1.

MANUFACTURED BY:

DATE OF MANUFACTURE_____ mo _____yr
INCOMPLETE VEHICLE MANUFACTURED BY:

DATE INC. VEH. MFD. _____ mo _____yr

GVWR_____
GAWR FRONT_____ with
_____ tires,
_____ rims, @ _____psi cold _____
GAWR INTERMEDIATE (1)_____ with
_____ tires,
_____ rims, @ _____psi cold _____
GAWR INTERMEDIATE (2) _____ with
_____ tires,
_____ rims, @ _____psi cold_____
GAWR REAR _____ with
_____ tires,
_____ rims, @ _____psi cold_____

THIS VEHICLE CONFORMS TO ALL
APPLICABLE FEDERAL MOTOR VEHICLE
SAFETY STANDARDS IN EFFECT IN:

_____ mo _____yr

VEHICLE IDENTIFICATION NUMBER:

VEHICLE TYPE: _____

FIGURE 2.1

Section II - SPECIFICATIONS (cont'd)

2.2 SERIAL NUMBER / SPECIFICATION LABELS

Each Century 820 Wrecker will have a Serial Number/ Specification Label mounted to the wrecker base. Also, each Century Formula IIIT Wheel Lift will have a Serial Number/Specification Label mounted on the outer boom. These labels will display the Model Number, Serial Number, Lift/Tow and Cable Ratings. See Figures 2.2 and 2.3.

FIGURE 2.2

Section II - SPECIFICATIONS (cont'd)

2.2 SERIAL NUMBER / SPECIFICATION LABELS (cont'd)

FIGURE 2.3

2.3 SPECIFICATIONS - MODEL 820 Wrecker

20-ton hydraulic wrecker with dual hydraulic winches, full power two-stage boom, 96" wide heavy-duty body for 102" C.A. single axle chassis.

(a) Winches

Rating (1st Layer Each Drum) . . . . . 20,000 lb. each

(b) Cable

Diameter and Length each Drum . . . . . 9/16" dia. x 200 ft.
Type: . . . . . 6 x 19, hemp center IPS
Working limit, each line . . . . . .8,500 lbs.

(c) Wrecker Boom Specifications

BOOM POSITION	BOOM LENGTH CENTERLINE PIVOT PIN TO CENTERLINE SHEAVE	MAXIMUM WORKING HEIGHT (1)	MAXIMUM WORKING DISTANCE (2)	BOOM RATING STATIC (3)
RETRACTED	9' 8"	11' 8"	1' 10"	40,000 lbs.
EXTENDED	15' 8"	16' 3"	7' 10"	12,000 lbs.

2.3 SPECIFICATIONS - MODEL 820 Wrecker (cont'd)

(1) At maximum boom elevation of 40 degrees above horizontal.
(2) At boom angle of 1 degree above horizontal.
(3) At boom angle of 10 degrees above horizontal.

Note: All ratings are based on structural factors only, not vehicle capacities or capabilities.

2.4 SPECIFICATIONS - FORMULA IIIT Wheel Lift

Structural Rating:
- Extended . . . . . 10,000 lbs.
- Retracted . . . . . 12,000 lbs.
- Tow Rating (Using Lift Forks) . . . . . 50,000 lbs.

Distance from Tailboard:
- Extended . . . . . 85 inches
- Retracted . . . . . 26.5 inches

Tilt Angle:
- Above Horizontal (Full Up) . . . . . 10°
- Below Horizontal (Full Down) . . . . . 10°

"L" Bar Rating:
- Retracted . . . . . 6,000 lbs.
- Extended . . . . . 6,000 lbs.
- T.E.M.A. . . . . 6,000 lbs.

2.5 CHASSIS RECOMMENDATIONS

Minimum GVWR . . . . . 23,500 lbs.
Minimum C.A. (Cab to Axle) Dimension . . . . . 102 inches
Minimum Frame Length (Behing Centerline of Axle) . . . 36 1/2 inches

2.6 STANDARD EQUIPMENT

- Tandem Hydraulic Pump
- Winch Cable Assemblies
- Dual Variable Speed Hydraulic Winches

Section II - SPECIFICATIONS (cont'd)

2.6 STANDARD EQUIPMENT (cont'd)

- 360° Directional Boom End Swivels
- Dual Control Stations
- Power Boom Elevation with Integral Holding Valve
- Power Boom Extension
- Slide Pad System
- Lubrication Fittings on all Shafts and other moving parts
- 96" Wide Heavy Duty Body with Flat Floor
- Four Rear Tie Back Loops
- Large Tunnel Tool Compartment With Door Checks
- Safety Chains In Rear Pockets
- Federal Standard 108 Light Group
- Wiring Harness With Junction Box
- PTO
- Mud Flaps
- Dual Winch Clutch Release
- E-Z Service Hydraulic Filters
- All Components for Complete Installation
- Manual Rear Spades
- Spade Pads

2.7 OPTIONAL EQUIPMENT

- Hydraulic Rear Spades
- Additional Lifting Attachments
- Air Operated Winch Clutch Release
- Air Shift PTO
- Cable Tensioners
- Switch Panel
- Medium Duty Truck Hitch
- Hand-held Remote Control for Wheel Lift with Inside Cab Controls
- Light Pylons
- Convenience Group
- Rubber Covered Front Push Bumper
- Rubber Fenderettes
- Tool Compartment Lights
- Work Lights
- Wrecker Special Light Bar
- Snatch Blocks

Section II - SPECIFICATIONS (cont'd)

2.7 OPTIONAL EQUIPMENT (cont'd)

- Factory Installation
- Deck Mounted Glad Hands & 7 Pin Connector

Note: Specifications Subject to Change without Notification.

Section III - OPERATIONAL FUNCTIONS WRECKER

3.1 Your new wrecker is fully hydraulic. It receives its power by means of a Power Take-Off/Pump combination mounted to the truck transmission. Since the pump is attached to the PTO, no drive line or universal joints are required. See Figure 3.1.

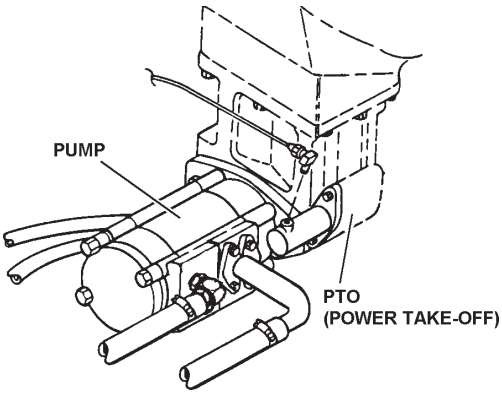

FIGURE 3.1

3.2 Each function of your wrecker can be controlled from either of the Dual Control Stations located at the rear of the Wrecker Body. See Figure 3.2.

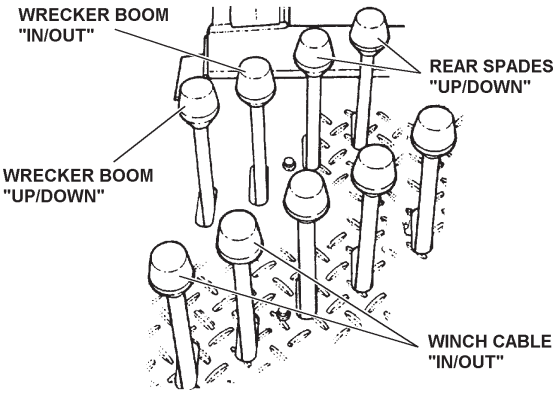

FIGURE 3.2

Section III - OPERATIONAL FUNCTIONS WRECKER (cont'd)

3.3 The Control Handles are clearly marked as to their functions and directions. Movement of the control handles meters the flow of oil through valves to control the speed of each function.

3.4 The Vernier Throttle Control, located at the left control station, is used to vary the speed of the truck engine to govern the maximum speed of the winches and cylinders. See Figure 3.3.

NOTE
WITH THE ADVENT OF COMPUTERIZED ELECTRONIC THROTTLES, VERNIER THROTTLE CONTROLS CANNOT BE USED DUE TO THE ABSENCE OF THROTTLE LINKAGES. CONSULT VEHICLE MANUFACTURER FOR RECOMMENDATIONS.

RECOMMENDED MAXIMUM ENGINE RPM - 1400 TO 1500 RPM*
* ALL HYDRAULICS WILL FULLY FUNCTION AT ENGINE IDLE

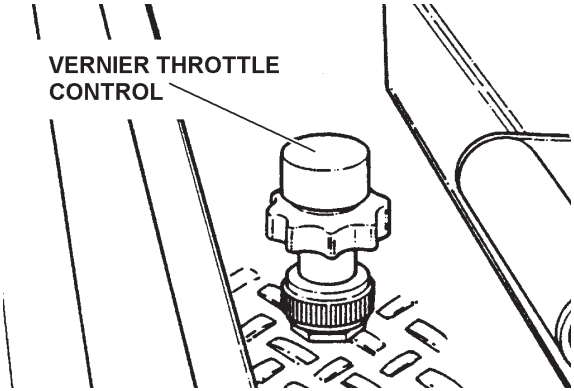

FIGURE 3.3

3.5 The Wrecker Boom is elevated and extended by means of double-acting hydraulic cylinders. The boom can be elevated or extended under "LOAD" or "NO-LOAD" conditions.

Section III - OPERATIONAL FUNCTIONS WRECKER (cont'd)

3.6 The self-locking, worm-driven winch is powered by its own hydraulic motor attached directly to the winch input shaft. See Figure 3.4.

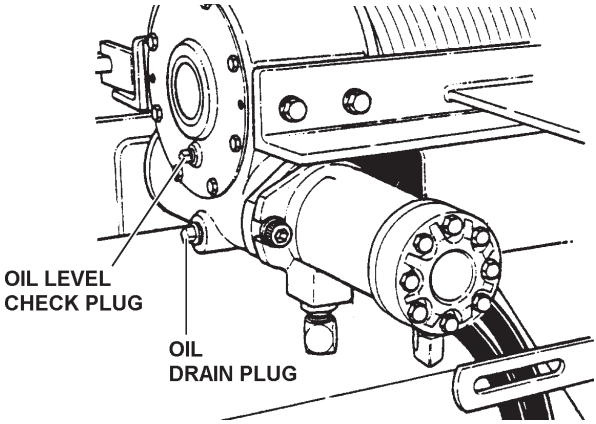

FIGURE 3.4

3.7 Before operating your Wrecker, remove the rubber shipping plug from the winch vent cap. See Figure 3.5.

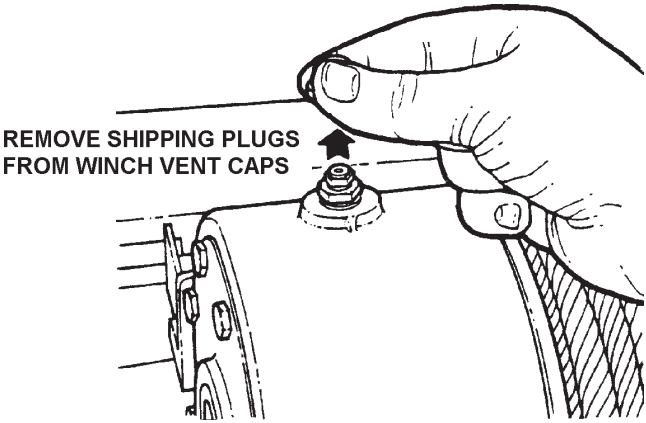

FIGURE 3.5

Section III - OPERATIONAL FUNCTIONS WRECKER (cont'd)

NOTE
CHECK OIL LEVEL IN WINCHES BEFORE ANY OPERATION. FILL TO PROPER LEVEL WITH REQUIRED GEAR LUBRICANT AS NEEDED. REFER TO FIGURE 3.4 AND SECTION V, MAINTENANCE FOR PROPER PROCEDURES.

3.8 Your wrecker is also equipped with Winch Free Spool Clutch Controls located at each winch (manual) or on either side of the wrecker body (air operated). These controls are used for allowing the winches to freespool for payout of cable. See Figure 3.6.

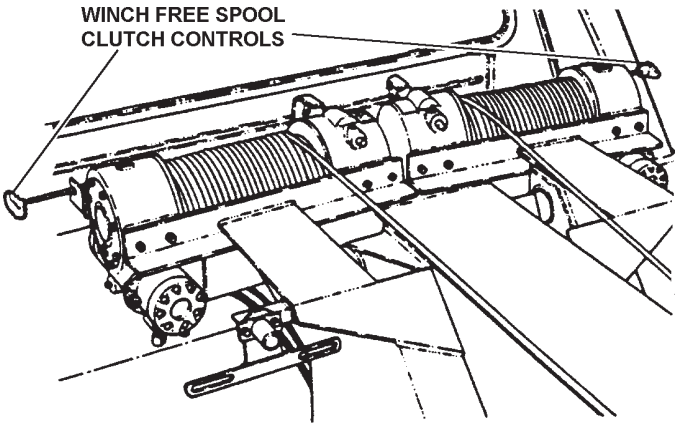

FIGURE 3.6

3.9 Always use Safety Chains on all towing and lifting applications. The safety chains are located on the top rear of the wrecker body. See Figure 3.7. Refer to Section 4.8 for proper safety chain procedures.

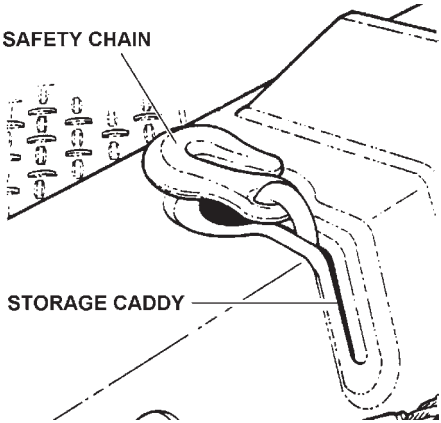

FIGURE 3.7

WARNING

**USE SAFETY CHAINS ON ALL
TOWING AND LIFTING APPLICATIONS**

NOTES

Section IIIA - OPERATIONAL FUNCTIONS
WHEEL LIFT

3A.1 Your new wheel lift is totally hydraulic. It receives its power from the truck engine by means of a Power Take-Off/Pump combination attached to the vehicle transmission. Since the pump is attached directly to the PTO, no drive line or universal joints are required. Refer to Figure 3.1.

3A.2 Each function of the Wheel Lift can be controlled from either of the Dual Control Stations located at the rear of the wrecker body. See Figure 3A.1.

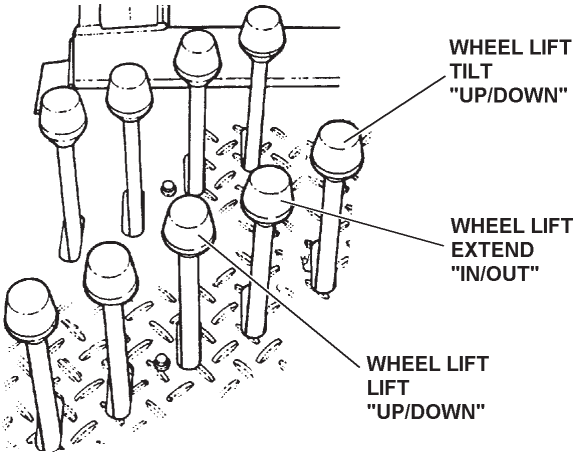

FIGURE 3A.1

3A.3 The Control Handles are clearly identified as to functions and directons. Movements of the control handles meters the flow of oil through valves to control the speed of each function.

3A.4 The Wheel Lift is elevated and extended by means of double-acting hydraulic cylinders and can be operated under "LOAD" or "NO-LOAD" conditions.

Section IIIA - OPERATIONAL FUNCTIONS
WHEEL LIFT (cont'd)

3A.5 The Vernier Throttle Control, located at the left control station, is used to vary the speed of the truck engine to govern the the maximum speed of the winches and cylinders. Refer to Figure 3.3.

NOTE
WITH THE ADVENT OF COMPUTERIZED ELECTRONIC THROTTLES, VERNIER THROTTLE CONTROLS CANNOT BE USED DUE TO THE ABSENCE OF THROTTLE LINKAGES. CONSULT VEHICLE MANUFACTURER FOR RECOMMENDATIONS.

RECOMMENDED MAXIMUM ENGINE RPM - 1400 TO 1500 RPM*
* ALL HYDRAULICS WILL FULLY FUNCTION AT ENGINE IDLE

3A.6 The In-Cab Control, when installed as an option, is dash mounted and controls the Formula III Wheel Lift. See Figure 3A.2.

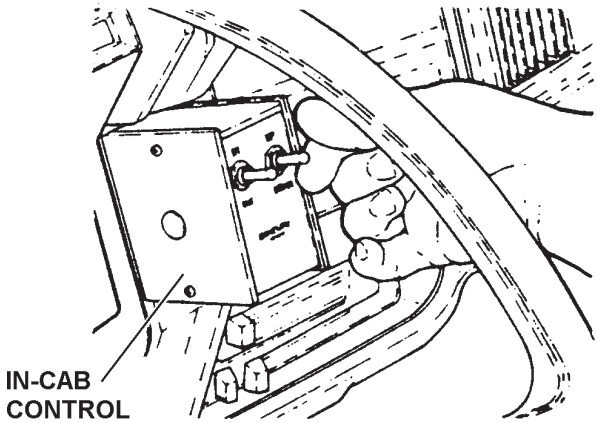

FIGURE 3A.2

3A.7 The optional Hand Held Remote Control Unit electrically meters the flow of oil through valves to control each related function. The buttons of the remote control unit are clearly marked for each function and direction. See Figure 3A.2.

Section IIIA - OPERATIONAL FUNCTIONS
WHEEL LIFT (cont'd)

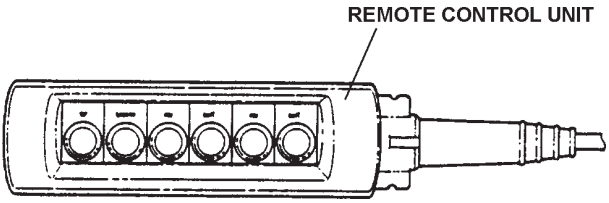

FIGURE 3A.3

3A.8 Lift Forks and other underlift towing accessories are located in the left hand tool box of the wrecker body. See Figure 3A.4.

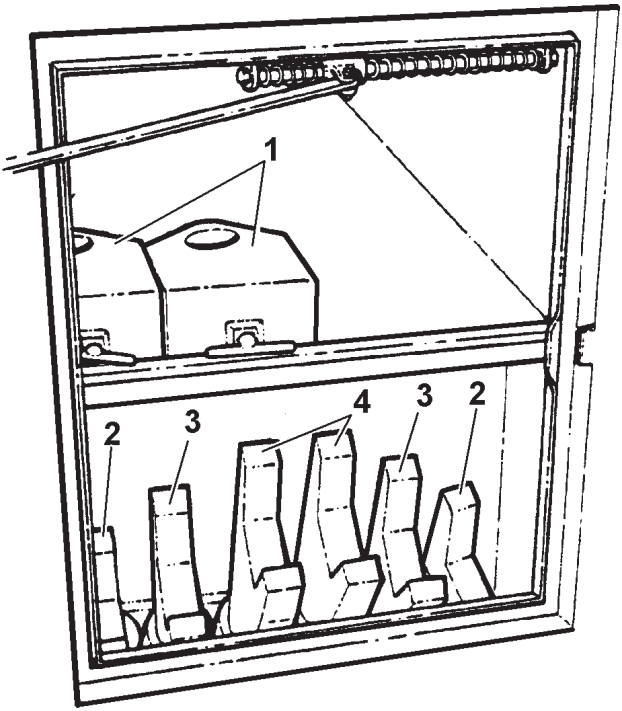

FIGURE 3A.4

WHEEL LIFT (cont'd)

WARNING

USE SAFETY CHAINS ON ALL TOWING AND LIFTING APPLICATIONS

Section IV - OPERATING INSTRUCTIONS WRECKER

4.1 For reasons of safety, it is important that the Owner(s) and Operator(s) should become thoroughly familiar with the controls and functions of the wrecker before attempting any operation.

4.2 HYDRAULIC WINCHES

The hydraulic winches are to be used in retrieving and lifting a vehicle for transport.

(a) **DO NOT** fasten the winch hook directly to any vehicle to be towed.
(b) **DO NOT** wrap the winch cable around any object.
(c) **DO NOT** exceed the working limit of the cable.
(d) **DO NOT** use the winches or cable for the lifting of people.

4.3 PREPARING TO LOAD VEHICLE

(a) Line wrecker up with the center of disabled vehicle to be towed.

(b) Reduce truck's engine to idle and apply parking brake. Depress clutch, place transmission in neutral and engage PTO by pulling knob located on panel in cab. See Figure 4.1.

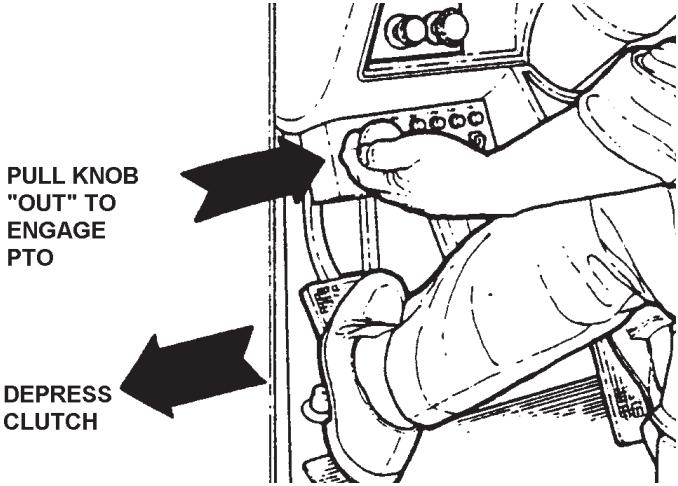

FIGURE 4.1

Section IV - OPERATING INSTRUCTIONS WRECKER (cont'd)

4.3 PREPARING TO LOAD VEHICLE (cont'd)

CAUTION

NEVER DRIVE TRUCK ON STREET WITH PTO ENGAGED. THIS CAN CAUSE PUMP FAILURE DUE TO OVER-SPEED AND OVERHEATING.

(c) Adjust engine speed to desired RPM using the Vernier Throttle Control located on the left hand side of the wrecker body.

DO NOT EXCEED 1500 RPM

4.4 CABLE PAYOUT

Before operating any control handles, observe the winch cables to make sure they are free and have sufficient slack to allow the boom to extend. If not, payout cable by using the Cable "IN/OUT" Controls, or switch on the Air-Operated Free Spool switch and manually pull cables out to a sufficient length for boom extension. See Figure 4.2.

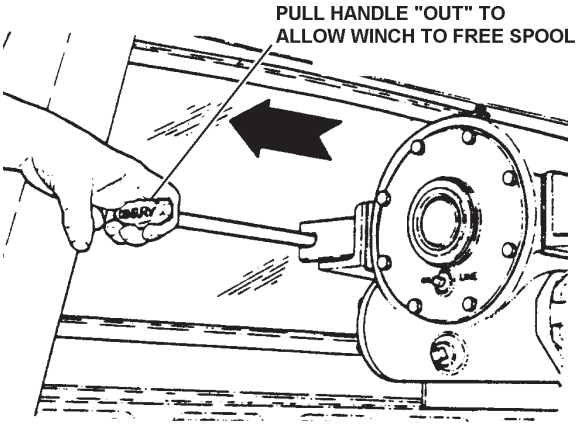

FIGURE 4.2

Section IV - OPERATING INSTRUCTIONS WRECKER (cont'd)

4.5 BOOM ELEVATION

Elevate boom to the desired height by use of the Boom "UP/DOWN" Control. See Figure 4.3.

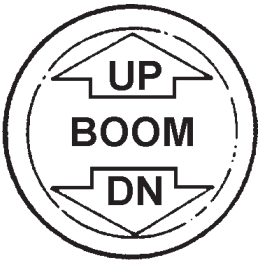

FIGURE 4.3

NOTE
IN THE EVENT OF HYDRAULIC PRESSURE LOSS, THE BOOM WILL REMAIN AT THE DESIRED ELEVATION DUE TO THE HOLDING VALVE LOCATED IN THE BASE OF THE LIFT CYLINDERS.

4.6 BOOM EXTENSION

Extend Boom to desired length by use of the BOOM "IN-OUT" Control. See Figure 4.4.

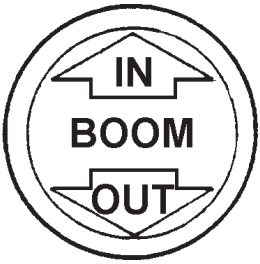

FIGURE 4.4

Section IV - OPERATING INSTRUCTIONS WRECKER (cont'd)

4.7 TOWING VEHICLE WITH WRECKER

(a) After preparations have been made, back the wrecker up to vehicle until the tow sling makes contact with bumper. Attach "J" or "T" hook chains to vehicle and towbar. See Figure 4.5. (Refer to "TOW SLING OWNER'S MANUAL" for recommended use of towing slings. For a more particular hook up, see vehicle "OWNER'S MANUAL" or the "AAA TOWING MANUAL").

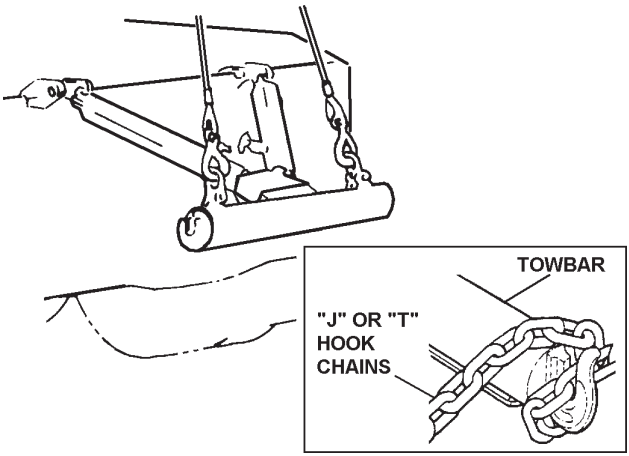

FIGURE 4.5

(b) Lift vehicle to be towed by retrieving cable slowly with use of CABLE "IN-OUT" Control. See Figure 4.6.

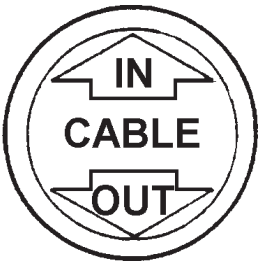

FIGURE 4.6

Section IV - OPERATING INSTRUCTIONS WRECKER (cont'd)

4.7 TOWING VEHICLE WITH WRECKER (cont'd)

NOTE
WHEN TOWING FROM REAR DRIVE AXLES, PUT VEHICLE IN GEAR AND *ENGAGE* PARKING BRAKE.

WHEN TOWING FROM FRONT DRIVE AXLES, PUT VEHICLE IN GEAR AND *DISENGAGE* PARKING BRAKE.

WARNING

USE SAFETY CHAINS ON ALL TOWING AND LIFTING APPLICATIONS

4.8 SAFETY CHAIN HOOK-UP PROCEDURES

(a) Extend free end of Safety Chain from storage caddy at top rear of wrecker body. See Figure 4.7.

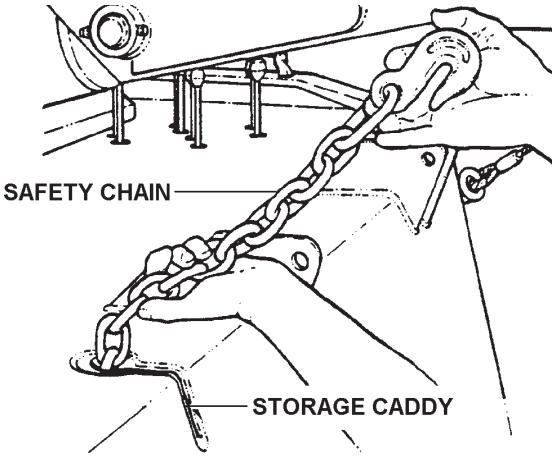

FIGURE 4.7

4.8 SAFETY CHAIN HOOK-UP PROCEDURES (cont'd)

(b) Route free end of chain to vehicle to be towed and attach to chassis around axle, leaf springs, frame or "A" frame. See Figures 4.8 thru 4.11.

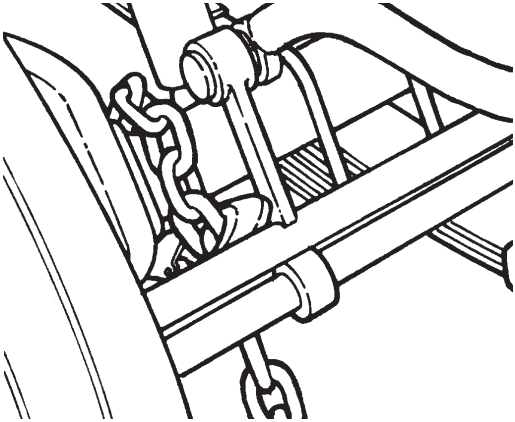

FIGURE 4.8 AXLE HOOK-UP

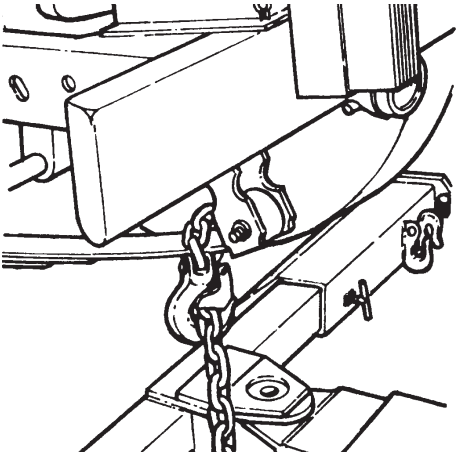

FIGURE 4.9 LEAF SPRING HOOK-UP

4.8 SAFETY CHAIN HOOK-UP PROCEDURES (cont'd)

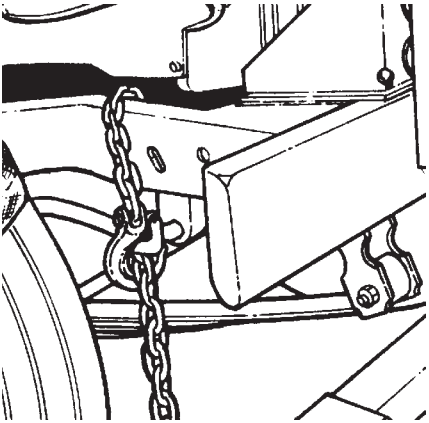

FIGURE 4.10 FRAME HOOK-UP

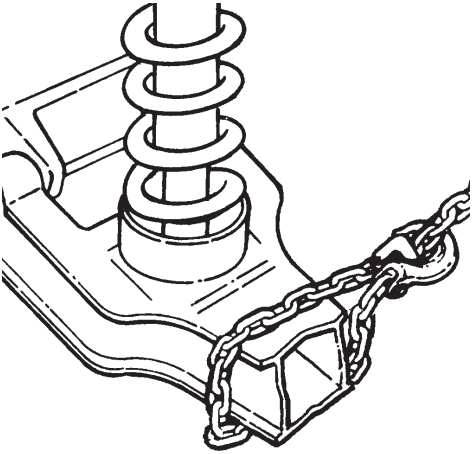

FIGURE 4.11 A-FRAME HOOK-UP

(c) Pull excess chain back to storage caddy. While holding chain securely, feed any excess chain back into storage caddy until enough slack is left in chain for sharp turns.

4.8 SAFETY CHAIN HOOK-UP PROCEDURES (cont'd)

CAUTION

SAFETY CHAIN MUST BE SEATED IN BOTTOM OF SLOT BEFORE ATTEMPTING TO TOW VEHICLE. SEE FIGURE 4A.12.

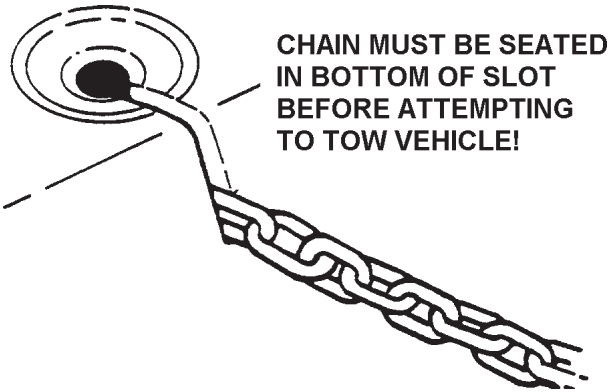

FIGURE 4.12

Section IVA - OPERATING INSTRUCTIONS WHEEL LIFT

4A.1 For reasons of safety, it is important that the Owner/Operator(s) of the Wheel Lift become thoroughly familiar with its controls, components and load requirements before attempting any operation.

4A.2 CONTROLS

The Control Levers are located at the rear of the body on both the left and right sides. All the controls are clearly identified as to their function and direction. Refer to Figure 3A.1.

4A.3 PREPARING TO LOAD VEHICLE

(a) Line the Wheel Lift up with the center of disabled vehicle to be towed. See Figure 4A.1.

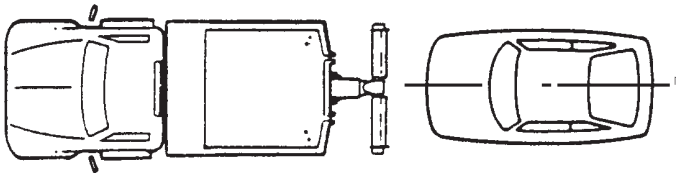

FIGURE 4A.1

(b) Reduce truck's engine to an idle and apply parking brake. Depress clutch, place transmission in neutral and engage PTO by pulling out knob located on the dash panel in truck cab. Refer to Figure 4.1.

CAUTION

NEVER DRIVE TRUCK ON STREET WITH PTO ENGAGED. THIS CAN CAUSE PUMP FAILURE DUE TO OVER-SPEED AND OVERHEATING.

Section IVA- OPERATING INSTRUCTIONS
WHEEL LIFT (cont'd)

4A.3 PREPARING TO LOAD VEHICLE (cont'd)

(c) Adjust engine speed to desired RPM using the Vernier Throttle Control located on the left hand side of the wrecker body.

DO NOT EXCEED 1500 RPM

4A.4 WHEEL LIFT TOWING PREPARATION

(a) Loosen "T" handle and extend outer crosstube until the tire restraint retainers are just beyond the outer sidewall of tires on the vehicle to be towed. See Figure 4A.2.

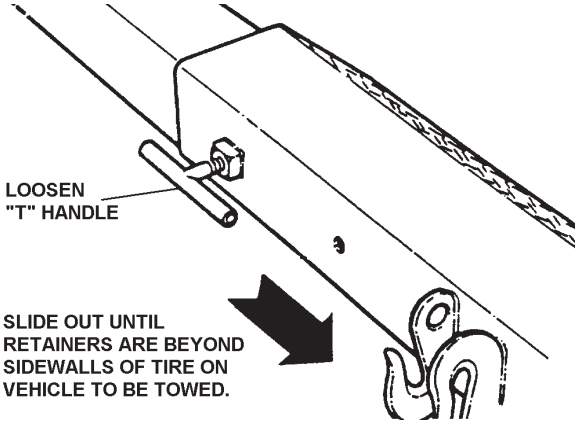

FIGURE 4A.2

(b) Lower Wheel Lift to ground, then raise until Wheel Lift just clears ground level by use of the Wheel Lift Lift "UP/DOWN" Control. See Figure 4A.3.

4A.4 WHEEL LIFT TOWING PREPARATION (cont'd)

FIGURE 4A.3

(c) Extend Wheel Lift Boom to maximum stroke, then retract approximately 3 inches by use of the Wheel Lift Extend "IN/OUT" Control. See Figure 4A.4.

FIGURE 4A.4

(d) Due to the position of the disabled vehicle it may be necessary to tilt the Wheel Lift to obtain the proper position for pick-up. This may be accomplished by use of the Wheel Lift Tilt "UP/DOWN" Control. See Figure 4A.5.

FIGURE 4A.5

4A.5 VEHICLE HOOK-UP

(a) After all preparations have been made as illustrated, back the Wheel Lift until the crosstubes are firmly against the tires of the vehicle to be towed. Take the truck out of gear and apply parking brake.

(b) Lower Wheel Lift to ground and extend boom until it is firmly against tires of disabled vehicle. See Figure 4A.6.

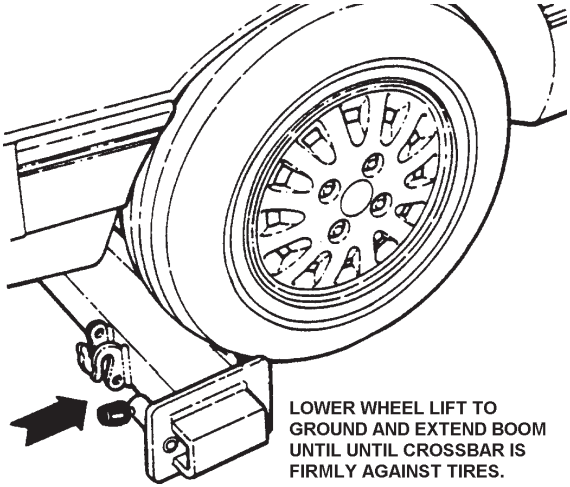

FIGURE 4A.6

(c) Disengage the tire restraint Plunger by pulling out and rotating 90°. See Figure 4A.7.

4A.5 VEHICLE HOOK-UP (cont'd)

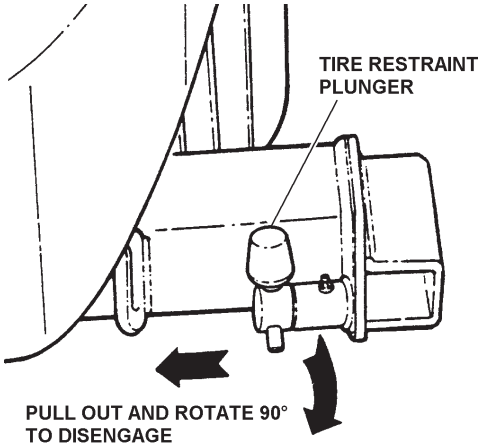

FIGURE 4A.7

(d) Insert Tire Restraint into crosstube until it is firmly against the rear of the tire. See Figure 4A.8.

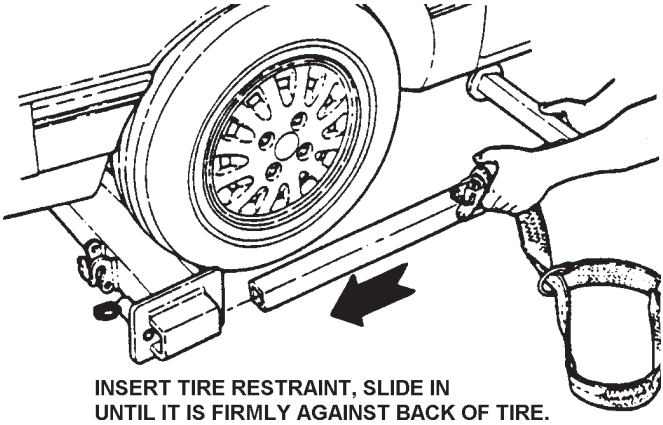

FIGURE 4A.8

4A.5 VEHICLE HOOK UP (cont'd)

(e) Engage Plunger and adjust the tire restraint until the plunger engages in the appropriate hole in the tire restraint.

NOTE
WITH TIRE RESTRAINTS INSTALLED, BE CERTAIN THAT IT WILL CAUSE NO DAMAGE TO THE VEHICLE TO BE TOWED WHEN UNDERLIFT IS IN ITS RAISED POSITION.

TO AVOID ANY DAMAGE FROM TIRE RESTRAINTS, ADJUST CROSSTUBES TO DESIRED POSITION.

(f) Repeat procedures (c) through (e) on opposite side of vehicle.

(g) Take vehicle out of gear and make certain parking brake is off.

(h) Using the Wheel Lift Lift "UP/DOWN" Control raise the vehicle to desired towing height.

4A.6 SECURING VEHICLE TO BE TOWED

(a) Release Safety Strap Ratchet by releasing lock on Ratchet Lock Handle. See Figure 4A.9.

4A.6 SECURING VEHICLE TO BE TOWED (cont'd)

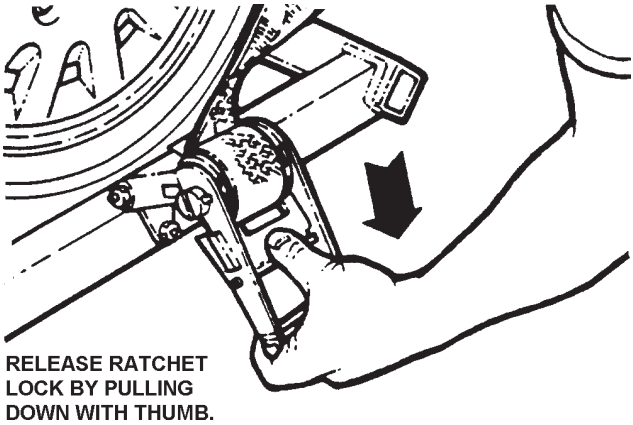

FIGURE 4A.9

(b) With Ratchet Lock released, pull handle all the way up and pull out the desired length of Safety Strap.

(c) Position Safety Strap over top of tire as shown in Figure 4A.10. Make certain that the round portion of the "D"-Ring is towards the Wheel Lift.

4A.6 SECURING VEHICLE TO BE TOWED (cont'd)

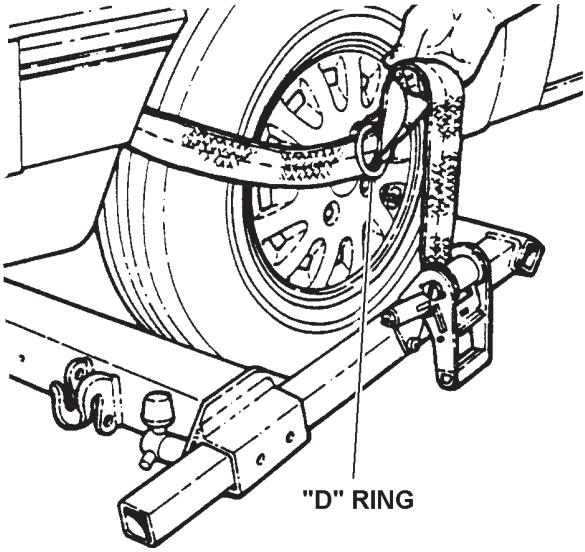

FIGURE 4A.10

NOTE
IF TOWING A TRUCK, OR A VEHICLE WITH LARGER THAN 15" TIRES, IT WILL BE NECESSARY TO USE THE SAFETY STRAP EXTENSION THAT IS PROVIDED. SEE FIGURE 4A.11 FOR APPLICATION METHOD.

4A.6 SECURING VEHICLE TO BE TOWED (cont'd)

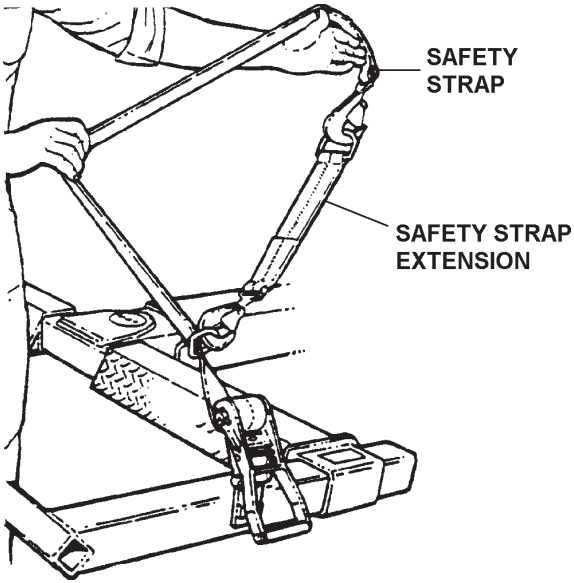

FIGURE 4A.11

(d) Release Ratchet Lock and tighten Safety Strap around tire securely with ratchet. See Figure 4A.12.

4A.6 SECURING VEHICLE TO BE TOWED (cont'd)

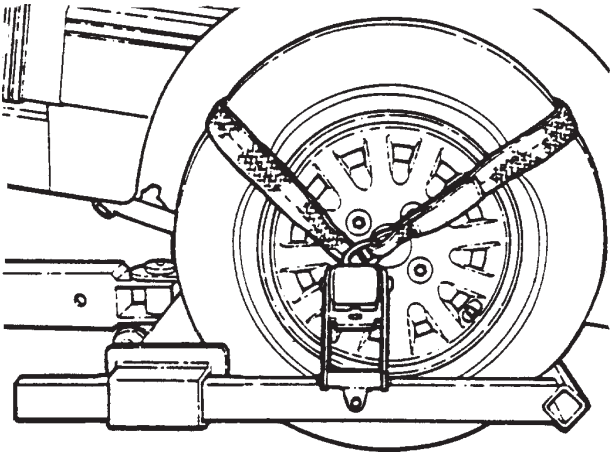

FIGURE 4A.12

(e) Repeat Safety Strap installation on opposite side of vehicle.

WARNING

WHEN TOWING FROM REAR AXLES, SECURE STEERING WHEEL OF VEHICLE IN TOW. DO NOT RELY ON THE STEERING WHEEL LOCKING DEVICE.

NOTE
IT MAY BE REQUIRED OF SOME VEHICLES TO REMOVE THE HUB CAPS BEFORE MOUNTING TO THE WHEEL LIFT.

(f) Retract the Wheel Lift Boom using the Wheel Lift Extend "IN/OUT" Control. Be certain there is enough clearance between vehicle bumper and tailgate of the wrecker for sharp turns.

4A.6 SECURING VEHICLE TO BE TOWED (cont'd)

NOTE
WHEN TOWING FROM REAR DRIVE AXLES, PUT VEHICLE IN GEAR AND ENGAGE PARKING BRAKE.

WHEN TOWING FROM FRONT DRIVE AXLES, PUT VEHICLE IN GEAR AND DISENGAGE PARKING BRAKE.

NOTE
THE CLOSER TO THE TAILGATE OF THE WRECKER A VEHICLE IS TOWED, THE MORE FRONT END WEIGHT WILL BE AVAILABLE FOR STEERING DURING TOW.

4A.7 SAFETY CHECK PROCEDURES

(a) In the event of a sudden stop, follow the procedures below for reasons of safety in towing.

1. Pull off road and check Safety Straps to make certain they are tight and secure.

2. Should the safety straps be loose, lower Wheel Lift to the ground allowing the tires to re-align themselves in the crossbars. Raise the Wheel Lift to desired towing height and tighten the safety straps securely with the Safety Strap Ratchet.

4A.8 UNLOADING TOWED VEHICLE

(a) Reverse steps 4A.5 through 4A.6.

4A.9 HOOK-UP FOR VEHICLE WITH FLAT TIRE(S)

(a) Loosen "T" Handle and extend outer crosstubes until tire restraint retainers are just beyond the outer sidewalls of tires on disabled vehicle. Refer to Figure 4A.2.

4A.9 HOOK-UP FOR VEHICLE WITH FLAT TIRE(S) (cont'd)

(b) Lower Wheel Lift to ground then raise until Wheel Lift just clears ground level.

(c) Fully extended Wheel Lift Boom, then retract approximately 3 inches.

(d) After all preparations are complete, back the Wheel Lift up until the crossbars are firmly against the tires of the disabled vehicle.

NOTE
MAKE CERTAIN THE TRANSMISSION IS IN GEAR (PARK) AND THE PARKING BRAKE IS ENGAGED ON THE DISABLED VEHICLE BEFORE THE WHEEL LIFT CROSSBAR IS ENGAGED.

(e) Should only one tire be flat, secure the inflated tire in normal fashion. Refer to 4A.5 and 4A.6.

(f) Extend the Wheel Lift Boom as far as possible against the flat tire(s). This should allow the crossbar to compress the tire completely. See Figure 4A.13.

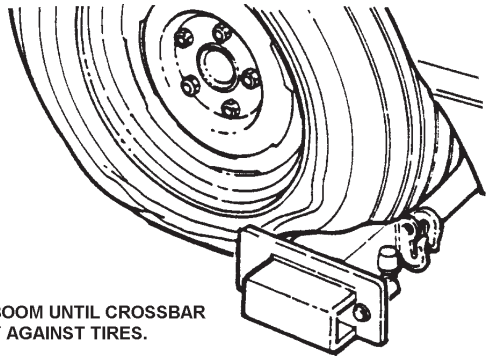

FIGURE 4A.13

4A.9 HOOK-UP FOR VEHICLE WITH FLAT TIRE(S) (cont'd)

(g) Install tire restraint onto flat tire. See Figure 4A.14.

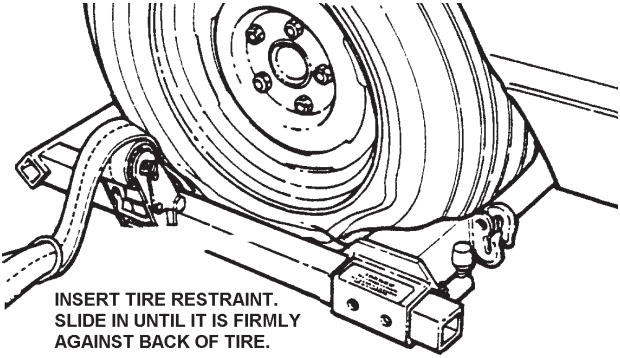

FIGURE 4A.14

(h) Place transmission in neutral and disengage parking brake on disabled vehicle.

(i) Raise the vehicle and place blocks on timbers beneath the flat tire. Lower the Wheel Lift allowing the tire to rest on the blocking.

(j) Engage parking brake and place transmission in gear (park) of the disabled vehicle.

(k) Extend Wheel Lift further, allowing the crossbar to compress the tire further. Re-adjust Tire Restraint as far as possible into the flat tire. This ensures the rim of the wheel will rest on the crossbar and tire restraint.

(l) Raise Wheel Lift and remove blocking from beneath the tire.

(m) Install Safety Strap on flat tire. Refer to Section 4A.7, SECURING VEHICLE TO BE TOWED.

4A.9 HOOK-UP FOR VEHICLE WITH FLAT TIRE(S) (cont'd)

(n) When tightening Safety Strap around a flat tire be certain it has the tire completely collapsed. This ensures proper installation of the strap on a flat tire. See Figure 4A.15.

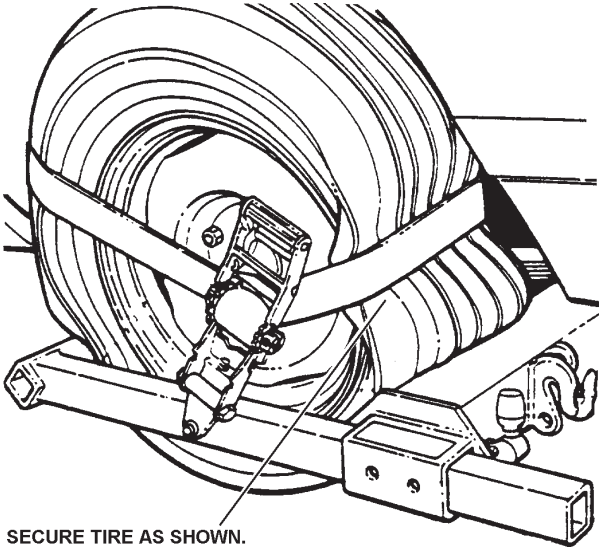

FIGURE 4A.15

4A.10 OUTER CROSS TUBE REMOVAL

(a) Loosen "T" Handles and fully extend Outer Cross Tubes.

(b) Insert a screwdriver or 1/4" rod into Stop Rod Hole located beside "T" Handle. See Figure 4A.16.

4A.10 OUTER CROSS TUBE REMOVAL (cont'd)

(a) Loosen "T" Handles and fully extend Outer Cross Tubes.

(b) Insert a screwdriver or 1/4" rod into Stop Rod Hole located beside

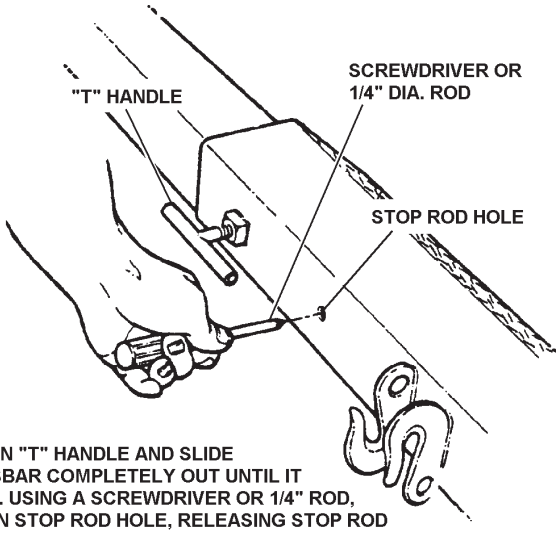

LOOSEN "T" HANDLE AND SLIDE CROSSBAR COMPLETELY OUT UNTIL IT STOPS. USING A SCREWDRIVER OR 1/4" ROD, PUSH IN STOP ROD HOLE, RELEASING STOP ROD FOR REMOVAL OF CROSSBAR.

FIGURE 4A.16

(c) While pushing in to release Stop Rod, pull outer crosstube off the crossbar. To reinstall outer crosstubes, simply slide them onto the crossbar. The Stop Rod will automatically engage when slid all the way on. Tighten "T" Handles.

4A.11 TOW FORK ADAPTERS

(a) Remove outer crosstubes.

(b) Loosen "T" Handles on Fork Adapters and slide onto crossbar. See Figure 4A.17.

4A.11 TOW FORK ADAPTERS (cont'd)

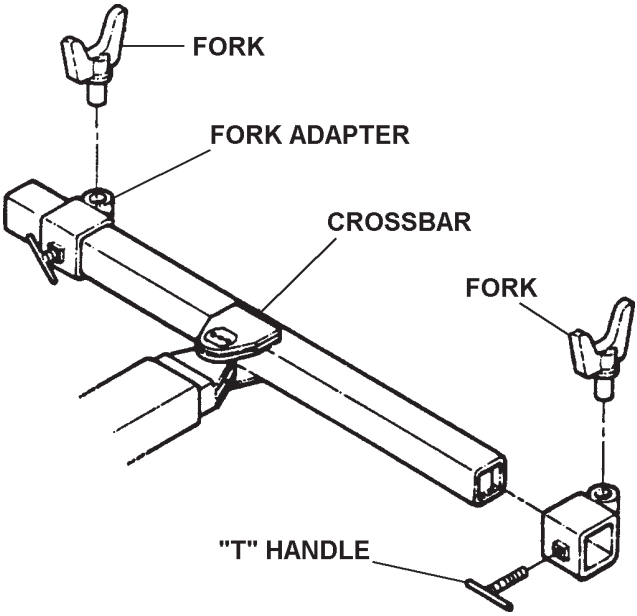

FIGURE 4A.17

NOTE
THE FORK ADAPTERS CAN BE PLACED IN ANY OF FOUR (4) POSITIONS AND ANY LOCATION ON THE CROSSBAR. SEE FIGURE 4A.18.

4A.11 TOW FORK ADAPTERS (cont'd)

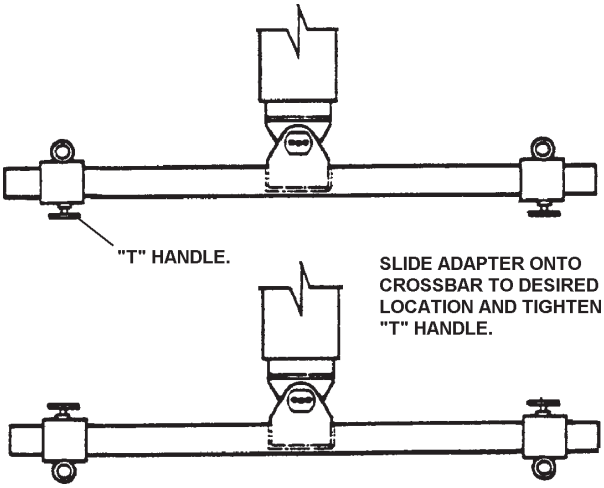

FIGURE 4A.18

4A.12 TOW FORK & ADAPTER APPLICATIONS

(a) Align Wheel Lift with disabled vehicle.

NOTE
STEPS (b) THROUGH (d) ARE NOT NECESSARY PROVIDED THE AXLE IS HIGH ENOUGH TO ALLOW EXTENSION OF BOOM WITH FORKS AND ADAPTERS INSTALLED ON CROSSBAR.

(b) Extend the Boom (without adapters or forks) until crossbar is centered with axle of disabled vehicle.

(c) Raise vehicle until tire can be blocked up high enough to allow forks to clear axle when installed onto the crossbar.

4A.12 TOW FORK & ADAPTER APPLICATIONS (cont'd)

(d) Block up tires and lower Boom until boom can be retracted for installation of adapters and forks.

(e) Install adapters in desired configuration on crossbar. Select and install desired forks into adapters.

(f) Extend Boom until Forks are beneath axle or frame as desired.

(g) Manually adjust adapters on crossbar to a point where the forks will come in contact with the frame or axle in the desired towing position.

(h) Tighten "T" Handles on adapters. Attach safety chains around axle or frame, crossbar and forks as shown in Figure 4A.19.

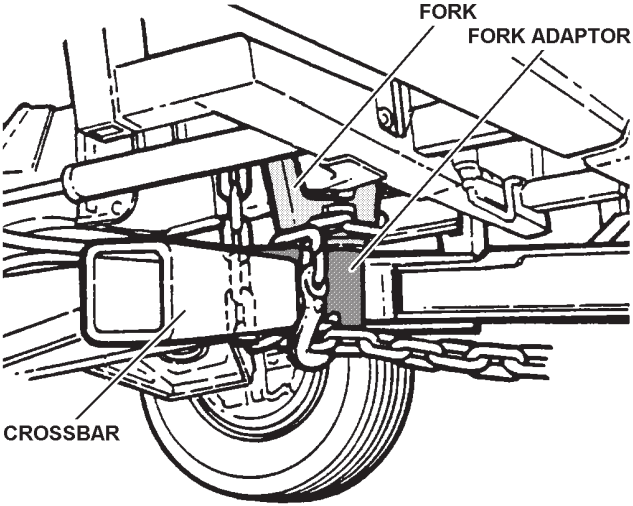

WRAP SAFETY CHAINS AROUND AXLE, CROSSBAR, AND FORKS, AND SECURE AS SHOWN.

FIGURE 4A.19

4A.12 TOW FORK & ADAPTER APPLICATIONS (cont'd)

WARNING

USE SAFETY CHAINS ON ALL TOWING AND LIFTING APPLICATIONS

(i) Raise vehicle to desired height for towing.

(j) Remove any blocks previously placed under the tires.

(k) Retract Boom pulling disabled vehicle as close to the Wheel Lift body as possible while maintaining enough distance for sharp turns.

(l) Raise Boom to desired towing height.

(m) Pull excess Safety Chain back into Storage Caddy. Be certain to allow enough slack for sharp turns.

CAUTION

SAFETY CHAIN MUST BE SEATED IN BOTTOM OF SLOT BEFORE ATTEMPTING TO TOW VEHICLE. SEE FIGURE 4A.20.

4A.12 TOW FORK & ADAPTER APPLICATIONS (cont'd)

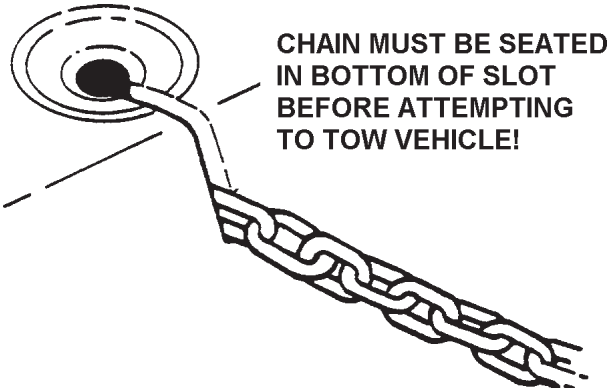

FIGURE 4A.20

Section V - MAINTENANCE

5.1 The continued operation of your Century Wrecker is largely dependent upon strict adherence to a properly scheduled preventive maintenance program. To help you in this program, the manufacturer has provided the following information regarding lubrication, preventive maintenance and hydraulic system care.

5.2 HYDRAULIC SYSTEM

The importance of absolute cleanliness of the hydraulic system cannot be over-stressed. The smallest amount of grit, metal flake or other foreign material in the system can cause extensive damage to pumps, motors and valves. The manufacturer has taken every measure to assure that each component and fitting was thoroughly cleaned before your unit was shipped to you. Therefore, servicing of the system should be done with extreme care.

(a) Before checking oil level in reservoir, wipe away all dirt, grease and grime around filler cap before removing it. Make certain that all containers, funnels and pouring spouts are absolutely clean before filling reservoir.

(b) When replacing hoses, fittings or other components, clean thoroughly; then assemble carefully.

(c) Failure to observe these precautions, and failure to change the filter element at regular intervals could result in loss of your warranty in the event of failure of certain components.

5.3 LUBRICATION & PREVENTIVE MAINTENANCE

The following general lubrication and preventive maintenance should be performed at least once per month for moderate usage or more often as required, for heavy usage.

(a) Inspect, repair or replace any worn, cracked, leaking, otherwise damaged components including, but not limited to, the following:

1. **Hydraulic Oil Filter**
2. **Oil Reservoir**
3. **Controls**
4. **Cables and Fittings**

5.3 LUBRICATION & PREVENTIVE MAINTENANCE (cont'd)

5. **Hydraulic Hoses and Fittings**
6. **Lights and Wiring**
7. **Winches**
8. **Pivot Bearing Surfaces and Pins**

(See Lubrication Charts, page V-5 & V-6.)

(b) Check hydraulic oil level in reservoir and fill to proper level. Refer to 5.4, SUMMARY OF REQUIRED LUBRICANTS for recommended oils to use.

(c) Replace hydraulic oil filters after first week of operation, then every three (3) months thereafter.

(d) Inspect all bolts for tightness and re-tighten as necessary. Vibration and stress may loosen even properly torqued bolts.

(e) Lubricate all grease fittings on the Wrecker and Wheel Lift weekly including:

1. **Bellcranks and Control Handle Shafts**
2. **Winch**
3. **Cables**
4. **Cylinder Pivot Bearings**
5. **Cross Bar Pivot**
6. **Boom and Wheel Lift Slide Pads**
7. **Boom End Swivels**

(f) All bearing surfaces not equipped with grease fittings should be oiled using SAE 30 oil in a pump can.

(g) Check oil level of winches and fill to proper level, level plug on end plates. Use SAE 140 general purpose gear oil.

(h) Lubricate grease fitting on winch freespool clutch control.

(i) Lubricate winch cables using an oily rag while respooling onto drum. Other special cable lubricants are available which have better penetrating qualities. Consult your local oil company for a list of these.

5.4 SUMMARY OF REQUIRED LUBRICANTS

(a) **Hydraulic Oil**

Examples:
1. **Texaco - Rando HD 46**
2. **Shell - Tellus Oil 46**
3. **Mobil - Nuto H46**
   or Equal

(b) **Winch Worm Gear Oil** - SAE 140 general purpose gear oil.

Examples:
1. **Humble - Pen-O-Led EP #5**
2. **Phillips - Phillips Worm Gear Oil 140**
3. **Shell - Macona #978**
4. **Sinclair - Pennant EP #6**
5. **Standard - Stanogear #5**
6. **Texaco - Maropa #5**

(c) **Grease** - Synthetic Fortified Grease such as Drydene SFG or equivalent.

(d) **Oil for miscellaneous bearing surfaces** - SAE 30.

(e) **Cable Oil** - SAE 30 or special cable lubricant.

NOTE

THERE IS NO PRACTICAL WAY TO DETERMINE THE LIFE EXPECTANCY OF HYDRAULIC HOSES AND OTHER RUBBER COMPONENTS.

WHILE APPEARING TO BE IN EXCELLENT CONDITION, THESE COMPONENTS MAY BE ADVERSELY AFFECTED BY USAGE, WEATHER OR THE PASSING OF TIME.

THEREFORE, IT IS RECOMMENDED THAT ALL RUBBER COMPONENTS, ESPECIALLY HOSES, BE REPLACED EVERY FIVE (5) YEARS REGARDLESS OF APPEARANCE.

5.5 CARE OF HYDRAULICS IN COLD CLIMATES

Regions subject to continuous sub-zero or arctic climates require special hydraulic fluids. Contact Holmes or your local supplier for information regarding specific temperature requirements.

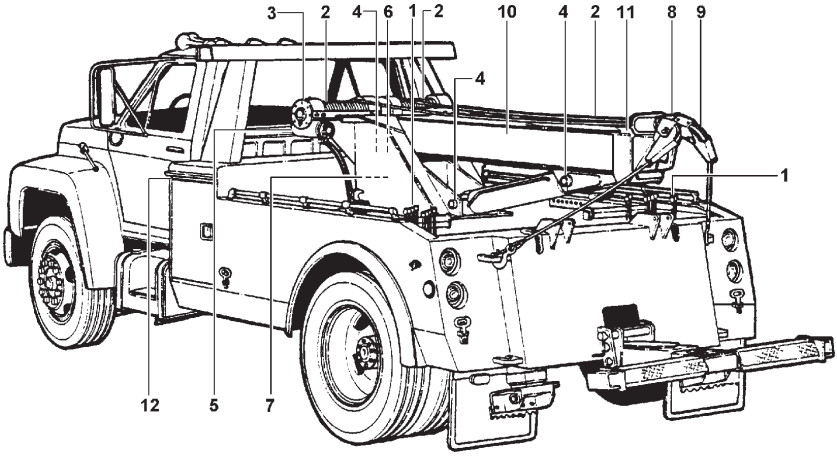

LUBRICATION CHART - WRECKER

1. Control Handle Shafts - synthetic fortified grease.
2. Cable - oily rag or approved cable lubricant.
3. Winches - SAE 140 gear oil to proper level.
4. Cylinder Pivot Bearings - synthetic fortified grease.
5. Winch Freespool - synthetic fortified grease.
6. Hydraulic Reservoir - approved hydraulic fluid to proper level.
7. Hydraulic Filter - Replace after first week, then every three (3) months.
8. Boom End Swivels - synthetic fortified grease.
9. Sheaves - synthetic fortified grease.
10. Extend / Lift Cylinders - synthetic fortified grease.
11. Boom Slide Pads - synthetic fortified grease.
12. Tool Compartment Door Hinges - use SAE 30 Oil.

NOTE
THE ABOVE SERVICE REQUIREMENTS SHOULD BE SERVICED MONTHLY.

SERVICE MORE OFTEN IF THE EQUIPMENT IS USED FREQUENTLY.

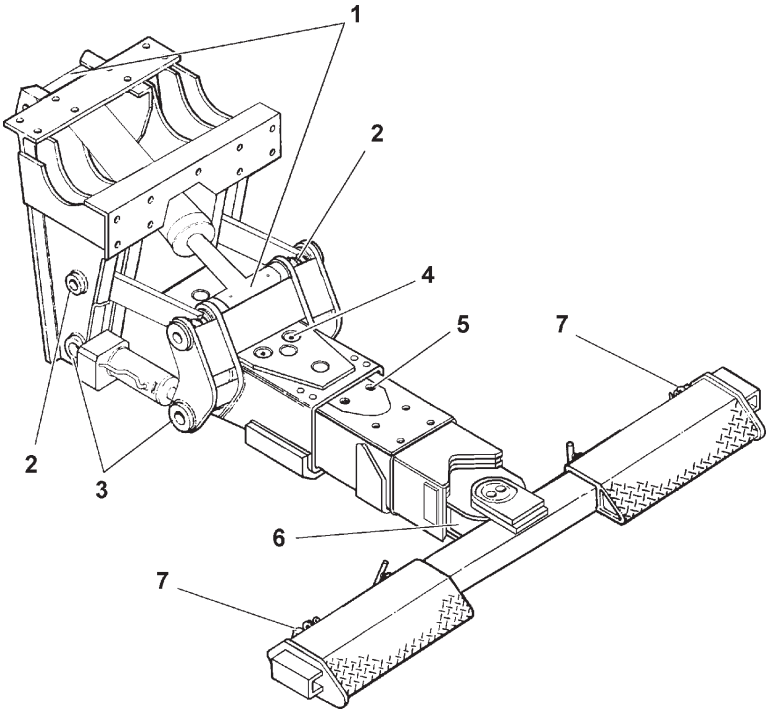

LUBRICATION CHART - WHEEL LIFT

1. Lift Cylinder Pivot Bearings - synthetic fortified grease.
2. Upper Arm Assembly - synthetic fortified grease.
3. Tilt Cylinder - synthetic fortified grease.
4. Wheel Lift Outer Boom - synthetic fortified grease.
   Wheel Lift Inner Boom - synthetic fortified grease.
5. Wheel Lift Pivot Pin - synthetic fortified grease.
6. Tire Restraint Plunger - synthetic fortified grease.

NOTE
THE ABOVE SERVICE REQUIREMENTS SHOULD BE SERVICED MONTHLY.

SERVICE MORE OFTEN IF THE EQUIPMENT IS USED FREQUENTLY.

Section V - MAINTENANCE (cont'd)

MAINTENANCE RECORD

DATE	MECHANIC	WEEKLY*	MONTHLY	QUARTERLY	SERVICE PERFORMED

*IMPORTANT: HYDRAULIC HOSES AND CABLES SHOULD BE INSPECTED WEEKLY FOR SIGNS OF ABRASION.

Section V - MAINTENANCE (cont'd)

MAINTENANCE RECORD

DATE	MECHANIC	WEEKLY*	MONTHLY	QUARTERLY	SERVICE PERFORMED

*IMPORTANT: HYDRAULIC HOSES AND CABLES SHOULD BE INSPECTED WEEKLY FOR SIGNS OF ABRASION.

Section V - MAINTENANCE (cont'd)

MAINTENANCE RECORD

DATE	MECHANIC	WEEKLY*	MONTHLY	QUARTERLY	SERVICE PERFORMED

*IMPORTANT: HYDRAULIC HOSES AND CABLES SHOULD BE INSPECTED WEEKLY FOR SIGNS OF ABRASION.

Section V - MAINTENANCE (cont'd)

MAINTENANCE RECORD

DATE	MECHANIC	WEEKLY*	MONTHLY	QUARTERLY	SERVICE PERFORMED

*IMPORTANT: HYDRAULIC HOSES AND CABLES SHOULD BE INSPECTED WEEKLY FOR SIGNS OF ABRASION.

Section V - MAINTENANCE (cont'd)

MAINTENANCE RECORD

DATE	MECHANIC	WEEKLY*	MONTHLY	QUARTERLY	SERVICE PERFORMED

*IMPORTANT: HYDRAULIC HOSES AND CABLES SHOULD BE INSPECTED WEEKLY FOR SIGNS OF ABRASION.

NOTES

Section VI - PARTS

This Section is provided by the manufacturer for the purpose of ordering any component part of the **820 Wrecker and Formula IIIT Wheel Lift** that may be required when part replacement is necessary.

Be certain to use only original equipment replacement parts for warranty purposes as well as for keeping your **820 Wrecker and Formula IIIT Wheel Lift** in its original state and optimum operating capacities.

When ordering replacement or spare parts be sure to provide the following information to the manufacturer's **Parts Department**.

1. **Manual Number & Date of Publication**
2. **Manual Page Number**
3. **Page Title**
4. **Reference Number of Part Desired**
5. **Part Number**
6. **Part Description**
7. **Quantity of Part Desired**

Providing this information will help ensure that the correct parts will be delivered to you in an expedient manner. Should additional information be required for repair or replacement of certain components, contact your Wrecker Manufacturer Authorized Representative.

The Manufacturer reserves the right, without notice or obligation, to improve or modify their products, which may change the specifications, models and feature availability.

Section VI - PARTS (cont'd)
BODY ASSEMBLY

BODY ASSEMBLY

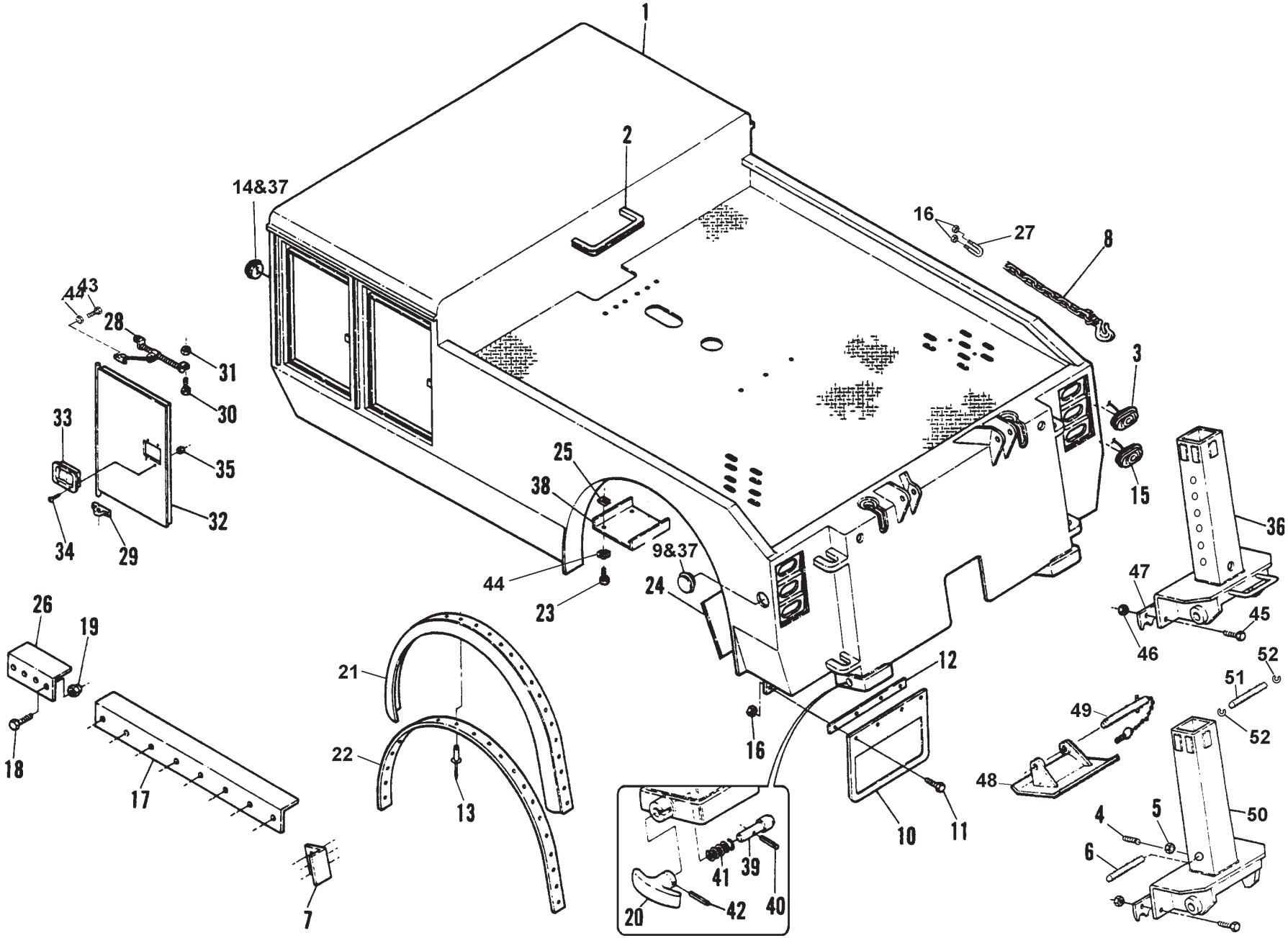

BODY ASSEMBLY

REF. NO.	NO. REQ'D	PART NUMBER	DESCRIPTION
1	1	0802930	BODY WELDMENT, 108" C.A.
2		0301799	FLEXIBLE TRIM
3	4	0301390	LIGHT, RED
4	1	0400139	SCREW, 3/8"-16 X 1-1/2" HEX SKT SET
5	1	0400392	NUT, 3/8"-16 NYLOK HEX
6	1	0705500	SHAFT, LOWER SPADE
7	2	0706553	ANGLE, TAILGATE MOUNTING
8	2	0303086	CHAIN, SAFETY
9	2	0301741	MARKER, SEALED RED
10	2	0301223	MUDFLAP
11	10	0400122	SCREW, 3/8"-16 X 1-1/4" HEX HD CAP
12	2	0705092	BAR, MUDFLAP
13	40	0400566	RIVET, 1/4"
14	2	0301742	MARKER, SEALED YELLOW
15	2	0302201	LIGHT, WHITE BACK-UP
16	14	0400392	NUT, 3/8"-16 HEX NYLOK
17	2	0705493	ANGLE, REAR MOUNTING
18	30	0400264	SCREW, 5/8"-11 X 2-1/4" HEX HD CAP
19	30	0400421	NUT, 5/8"-11 HEX NYLOK
20	2	0300331	HANDLE, PLUNGER "T"
21	1	0300505	LIGHT, BACK-UP (BUILT BEFORE 4/94)
22	1	0300501	LIGHT, STOP & TURN (BUILT BEFORE 4/94)
23	8	0400066	SCREW, 1/4"-20 x 3/4" HEX HD CAP
24	2	0705497	MUD GUARD
25	8	0400369	NUT, 1/4" "J" TINNERMAN
26	2	0705492	ANGLE, FRONT MOUNTING

REF. NO.	NO. REQ'D	PART NUMBER	DESCRIPTION
27	2	0302376	CLAMP
28	4	0301912	HOLDBACK, DOOR CHECK
29	8	0304264	HINGE, DOOR
30	8	0400070	SCREW, 1/4"-20 X 1" HEX HD CAP
31	8	0400367	NUT, 1/4"-20 HEX NYLOK
32	4	0304480	DOOR, TOOL BOX (ORDER BY SIZE)
33	4	0302855	LATCH, TOOL COMPARTMENT DOOR
34	16	0400021	SCREW, #8-32 RD HD
35	16	0400351	NUT, #8-32 KEPS
36	2	0801664	SPADE, MANUAL REAR
37	4	0301740	GROMMET, LIGHT MOUNTING W/PLUG
38	2	0705497	MUD GUARD, CONTROL CROSSROD
39	2	0700526	PIN, PLUNGER
40	2	0400568	PIN, ROLL
41	2	0300004	SPRING, PLUNGER
42	2	0400561	PIN, ROLL
43	4	0400060	SCREW, 1/4"-20 X 1/2" HEX HD CAP
44	8	0400452	WASHER, LOCK 1/4"
45	8	0400181	SCREW, 1/2"-13 X 1-1/2" HEX HD CAP
46	8	0400408	NUT, LOCK 1/2"-13
47	2	0705485	SPADE BLADE
48	2	0801665	SPADE PAD
49	2	0901311	SPADE PAD PIN ASSEMBLY
50	1	0801656	INNER SPADE TUBE (HYDRAULIC)
51	1	0705499	SHAFT, UPPER SPADE
52	2	0300110	RING, SNAP 1"

FORMULA IIIT WHEEL LIFT ASSEMBLY

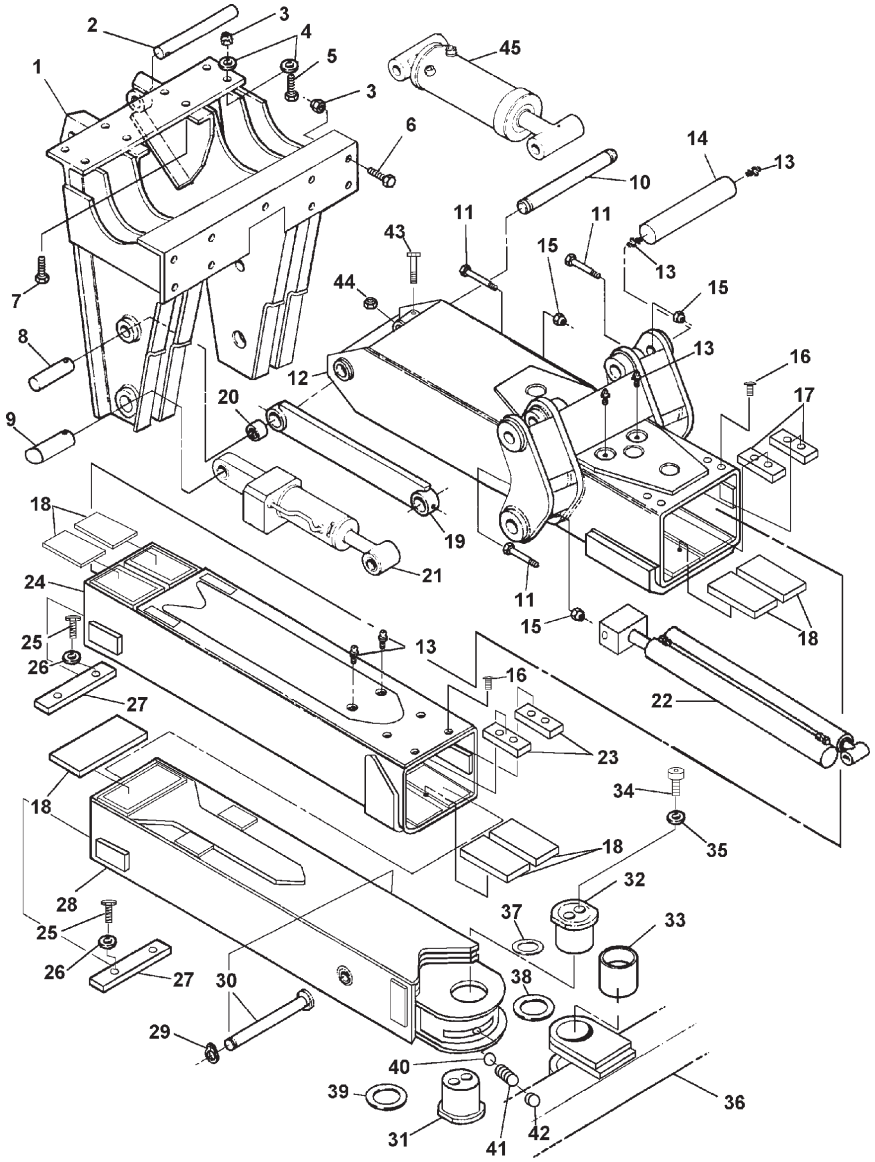

FORMULA IIIT WHEEL LIFT ASSEMBLY

REF. NO.	NO. REQ'D	PART NUMBER	DESCRIPTION
1	16	0300113	GREASE FITTING
2	1	0301197	COMPRESSION SPRING, CROSSBAR
3	1	0301398	BALL, 1-3/16" DIA. STEEL
4	7	0302561	SLIDE PAD
5	1	0302625	BUSHING
6	1	0303087	"O" RING, PIVOT PIN
7	REF.	0303101	LIFT CYLINDER
8	REF.	0303102	TILT CYLINDER, LEFT
	REF.	0303103	TILT CYLINDER, RIGHT
9	2	0303105	THRUST WASHER, 1/8"
10	2	0303106	THRUST WASHER, 1/16"
11	1	0400107	SCREW, 5/16"-18 X 2-1/2" HEX HD CAP
12	4	0400147	SCREW, 3/8"-24 X 5/8" HEX HD CAP
13	8	0400228	SCREW, 3/8"-24 X 5/8" BUTTON HD SKT
14	4	0400254	SCREW, 5/8"-11 X 2-1/2" HEX HD CAP
15	9	0400260	SCREW, 5/8"-11 X 2" HEX HD CAP
16	4	0400264	SCREW, 5/8"-11 X 2-1/4" HEX HD CAP
17	2	0400271	SCREW, 5/8"-11 X 4-1/2" SKT HD CAP
18	1	0400382	NUT, 5/16"-18 NYLOK HEX
19	9	0400392	NUT, 3/8"-16 NYLOK HEX
20	17	0400421	NUT, 5/8"-11 NYLOK HEX
21	4	0400481	LOCKWASHER, 3/8" EXT. TOOTH
22	16	0400506	WASHER, 5/8" X 1-3/4" FLAT

REF. NO.	NO. REQ'D	PART NUMBER	DESCRIPTION
23	2	0400508	LOCKWASHER, 5/8" HELICAL
24	2	0703231	STOP BLOCK, 2ND STAGE
25	2	0707034	STOP PLATE
26	1	0707271	PIN, EXTEND CYLINDER, BASE END
27	2	0707452	SPACER PAD
28	1	0710054	PIVOT PIN, TOP HALF
29	1	0710055	PIVOT PIN, BOTTOM HALF
30	1	0710193	PIN, UPPER LINK & LIFT CYLINDER
31	1	0710195	SPACER, DETENT SPRING
32	1	0802917	BOOM WELDMENT, 2ND STAGE
33	1	0802918	BOOM WELDMENT, 3RD STAGE
34	1	0802919	CROSSBAR WELDMENT
35	1	0802920	OUTER BOOM WELDMENT
36	1	0802921	FRAME WELDMENT
37	9	DE496	SCREW, 3/8"-16 X 3-3/4" HEX HD CAPP
38	1	HD55	IN, CYLINDER BASE
39	2	HD58	UPPER LINK ARM WELDMENT
40	4	HD59	BEARING, LINK UPPER
41	2	HD67B	PIN, UPPER LINK
42	4	HD68B	PIN, LOWER LINK
43	1	HD86	EXTEND CYLINDER PIN WELDMENT
44	1	HD89	RETAINING RING, 1-5/16"
45	REF.	HD130	CYLINDER, BOOM EXTENSION

FORMULA IIIT WHEEL LIFT HYDRAULICS

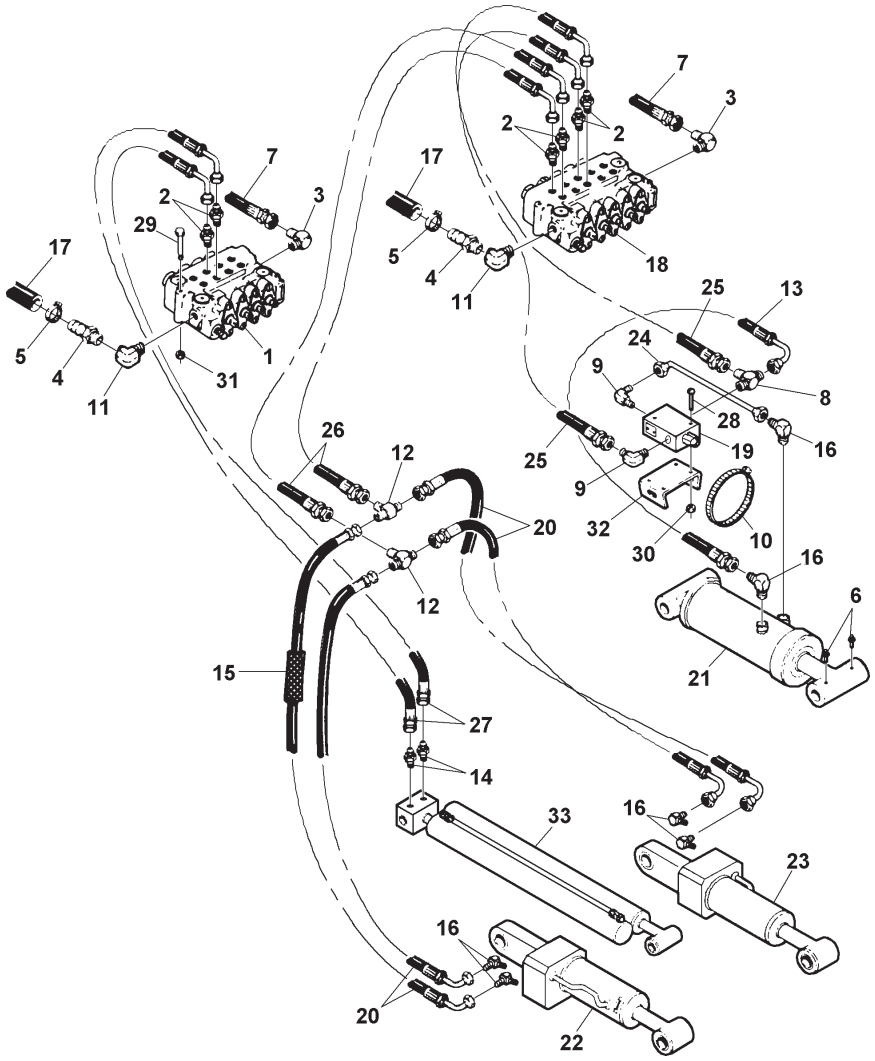

Section VI - PARTS (cont'd)
FORMULA IIIT WHEEL LIFT HYDRAULICS

REF. NO.	NO. REQ'D	PART NUMBER	DESCRIPTION
1	1	0300011	VALVE, 4 SPOOL
2	6	0300044	CONNECTOR, 6MJ-8MB
3	2	0300052	ELBOW, 8MJ-10MB90
4	2	0300055	HOSEBARB, 12C4-12MP
5	2	0300071	CLAMP, HOSE 1"
6	2	0300113	GREASE FITTING
7	2	0300165	HOSE ASSEMBLY, 91" H.P.
8	1	0300206	BRANCH TEE, 6MJ-6MJ-4MP
9	2	0300209	ELBOW, 6MJ-6MP90
10	1	0300365	CLAMP, CHECK VALVE RETAINING, 7"
11	2	0301375	ELBOW, STREET, 12MB-12FP90
12	2	0301377	TEE, 6MJ-6MJ-6MJ
13	1	0301473	HOSE ASSEMBLY, 18"
14	2	0301522	CONNECTOR, 6MJ-6MB
15	10	0301580	BLACK HOSE "SKUFF" JACKET
16	6	0301620	ELBOW, 6MJ-6MB90
17	7 FT.	0301674	RETURN HOSE, 3/4"
18	1	0302179	VALVE, 5 SPOOL
19	1	0302476	HOLDING VALVE, 3000 PSI
20	4	0302881	HOSE ASSEMBLY, 45"
21	1	0303101	LIFT CYLINDER
22	1	0303102	TILT CYLINDER, LEFT
23	1	0301303	TILT CYLINDER, RIGHT
24	1	0303160	TUBE ASSEMBLY, LIFT CYLINDER
25	2	0303169	HOSE ASSEMBLY, 104"
26	2	0303170	HOSE ASSEMBLY, 75"
27	4	0303171	HOSE ASSEMBLY, 111"
28	2	0400090	SCREW, 1/4"-20 X 1-3/4" RD HD
29	2	0400140	SCREW, 3/8"-16 X 4" HEX HD CAP
30	6	0400367	NUT, 1/4"-20 NYLOK HEX
31	6	0400392	NUT, 3/8"-16 NYLOK HEX
32	1	0700238	BRACKET, HOLDING VALVE
33	1	HD130	CYLINDER, BOOM EXTEND

Section VI - PARTS (cont'd)
OUTER CROSSTUBE & LIFT ADAPTERS

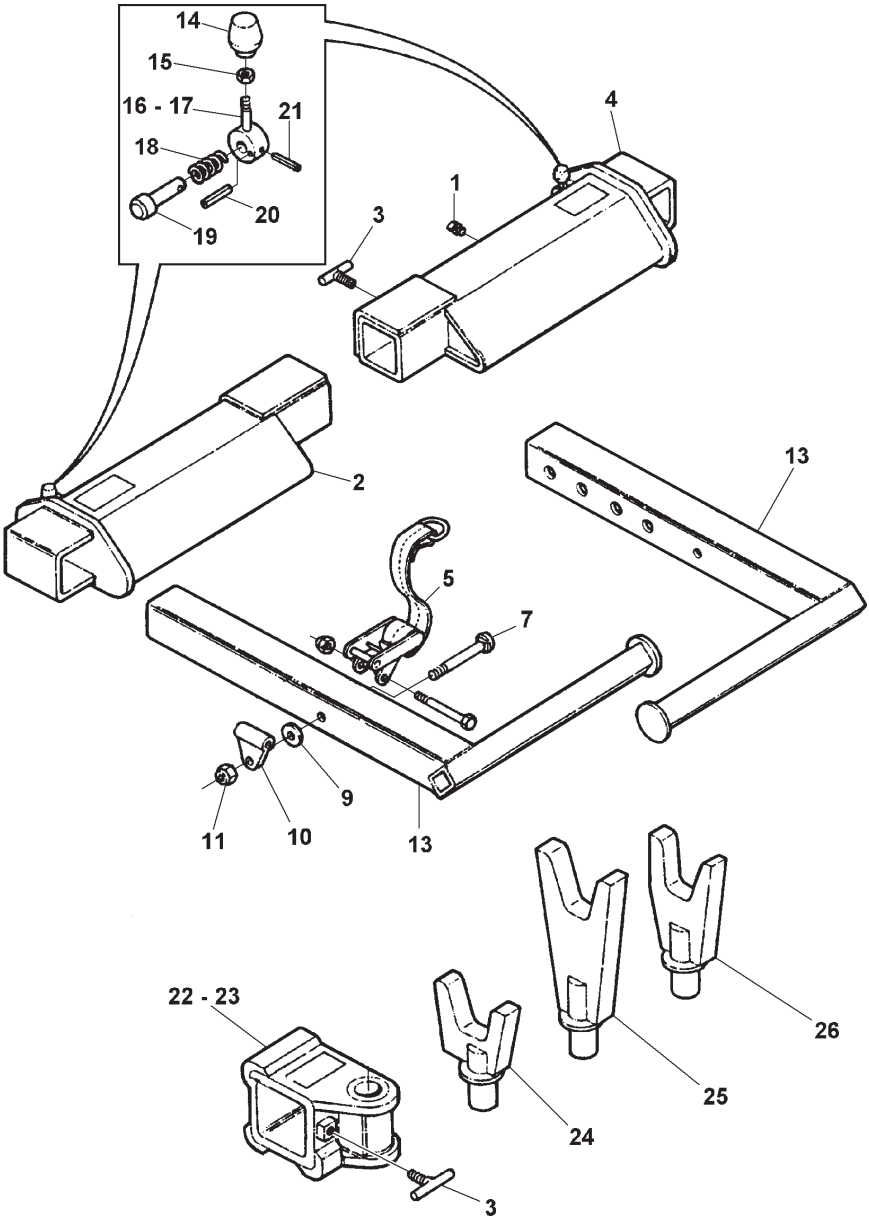

OUTER CROSSTUBE & LIFT ADAPTERS

REF. NO.	NO. REQ'D	PART NUMBER	DESCRIPTION
1	2	0300113	GREASE FITTING
2	2	0300341	KNOB, "L" BAR LOCK CONTROL
3	2	0301417	SPRING, PLUNGER PIN
4	2	0301681	EXTENSION, TIRE RESTRAINT
5	2	0301682	TIRE RESTRAINT
6	2	0400269	BOLT, 5/8"-11 X 4-1/2" CARRIAGE
7	2	0400393	NUT, 3/8"-16 HEX JAM
8	2	0400421	NUT, 5/8"-11 HEX NYLOK
9	2	0400506	WASHER, 5/8" FLAT
10	2	0400559	PIN, 3/16" X 1" ROLL
11	2	0400560	PIN, 5/32" X 1" ROLL
12	2	0706688	PIN, PLUNGER
13	4	0800590	HANDLE, "T"
14	2	0800839	BRACKET, RESTRAINT ASSEMBLY PIVOT
15	1	0802069	HANDLE, L.H. PLUNGER PIN
16	1	0802070	HANDLE, R.H. PLUNGER PIN
17	1	0802231	CROSSBAR, LEFT OUTER
18	1	0802232	CROSSBAR, RIGHT OUTER
19	1	0802249	ADAPTER, L.H. LIFT FORK OFFSET
20	1	0802250	ADAPTER, R.H. LIFT FORK OFFSET
21	2	0802606	RESTRAINT, TIRE MEDIUM
22	2	0802804	FORK, SHORT (3" OPENING)
23	2	0802805	FORK, MEDIUM (3" OPENING)
24	2	0802806	FORK, LONG (3" OPENING)
25	2	0802810	SPRING LIFT BRACKET
26	REF.	0802919	CROSSBAR WELDMENT
27	2	0902321	RETAINING PIN, SPRING LIFT BRACKET
28	2	0902378	RETAINING PIN

WRECKER ASSEMBLY

WRECKER ASSEMBLY

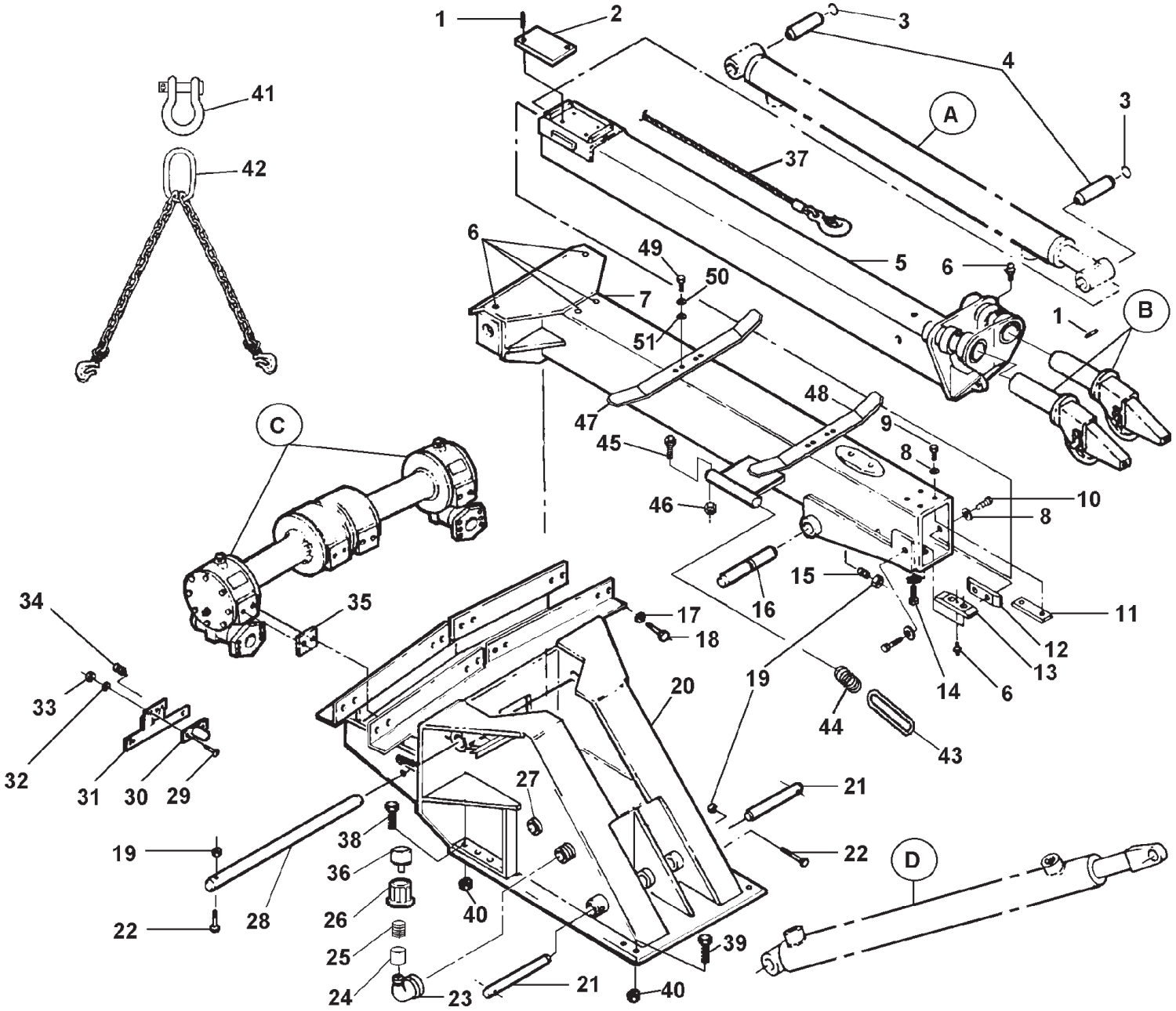

WRECKER ASSEMBLY

REF. NO.	NO. REQ'D	PART NUMBER	DESCRIPTION
1	8	0400554	ROLL PIN, 3/8" X 1"
2	1	0700792	SLIDE PAD, INNER BOOM
3	4	0300109	SNAP RING, 1-1/2"
4	2	0700780	SHAFT, EXTENSION CYLINDER
5	1	0800249	INNER BOOM WELDMENT
6	7	0300113	GREASE FITTING, ALEMITE
7	1	0800248	OUTER BOOM WELDMENT
8	12	0400482	LOCKWASHER, 3/8" HELICAL
9	4	0400121	SCREW, 3/8"-16 X 3/4" HEX HD CAP
10	4	0400141	SCREW, 3/8"-16 X 7/8" HEX HD CAP
11	2	0700778	TOP SPACER, OUTER BOOM
12	2	0700776	SLIDEPAD, SIDE, OUTER BOOM
13	1	0700775	SLIDEPAD, BOTTOM, OUTER BOOM
14	4	0400126	SCREW, 3/8"-16 X 1" HEX HD CAP
15	1	0400139	SCREW, 3/8"-16 X 1-1/2" HEX SKT SET
16	1	0700772	SHAFT, LIFT CYLINDER, BOOM
17	16	0400508	LOCKWASHER, 5/8" HELICAL
18	16	0400252	SCREW, 5/8"-11 X 1-1/2" HEX HD CAP
19	4	0400392	NUT, 3/8"-16 NYLOK HEX
20	1	0801163	WRECKER FRAME, 820
21	2	0700804	SHAFT, LIFT CYLINDER, LOWER
22	3	0400130	SCREW, 3/8"-16 X 3-1/2" HEX HD CAP
23	1	0300627	ELBOW, 90 DEG. STREET, 1-1/2" NPT
24	1	0303154	BELL REDUCER, PIPE, 2" NPT-1-1/2" NPT
25	1	0802975	FILLER NECK WELDMENT

REF. NO.	NO. REQ'D	PART NUMBER	DESCRIPTION
26	1	0305006	CAP, FILLER BREATHER W/STRAINER
27	1	0301541	SIGHT GAGE, TYPE S-1
28	1	0700781	SHAFT, BOOM PIVOT
29	2	0400061	SCREW, 1/4"-20 X 3/4" PAN HD SLOTTED
30	1	0300273	LICENSE PLATE ILLUMINATOR
31	1	0300076	LICENSE PLATE BRACKET
32	2	0400452	LOCKWASHER, 1/4" HELICAL
33	2	0400366	NUT, 1/4"-20 HEX
34	2	0300117	GROMMET, RUBBER #316
35	4	0706668	SHIM, WINCH MOUNTING
A	1	0302142	EXT. CYL., 820 (SEE PAGE VI-5)
B	1	0900431	BOOM SWIVEL ASSY, LT
	1	0900432	BOOM SWIVEL ASSY, RT
			(SEE PAGE VI-6)
C	1	0300605	WINCH, RAMSEY, HX-700, LT
	1	0300606	WINCH, RAMSEY, HX-700, RT
			(SEE PAGES VI-11 & VI-12)
D	1	0302344	BOOM LIFT CYL., LT
	1	0302345	BOOM LIFT CYL., RT
			(SEE PAGE VI-6)

BOOM ELEVATION HYDRAULICS

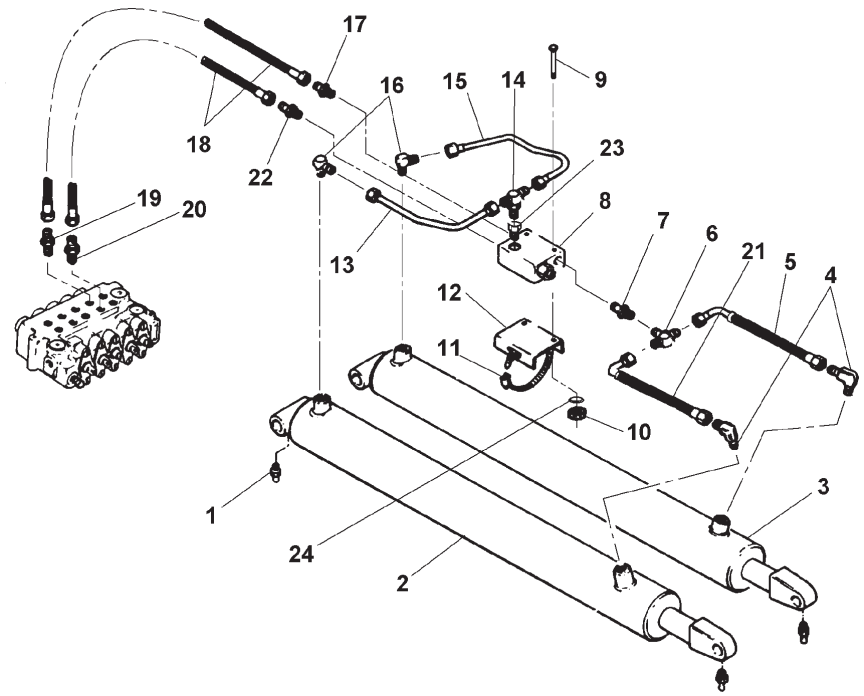

BOOM EXTENSION HYDRAULICS

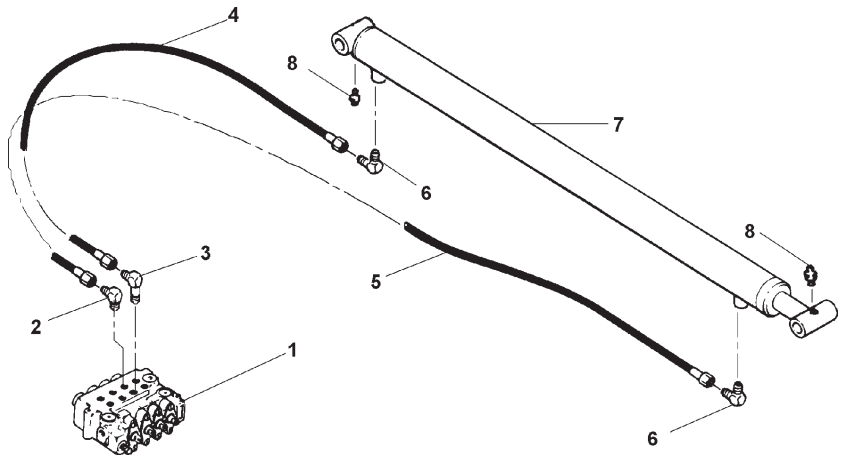

BOOM ELEVATION HYDRAULICS

REF. NO.	NO. REQ'D	PART NUMBER	DESCRIPTION
1	4	0300113	GREASE FITTING
2	1	0302344	CYLINDER, BOOM LIFT, LEFT
3	1	0302345	CYLINDER, BOOM LIFT, RIGHT
4	1	0300229	ELBOW, 8MJ-8MP90
5	1	0303166	HOSE ASSEMBLY, ELEV. CYL., UPPER RIGHT
6	1	0302796	TEE, 8MJ-8MJ-8FJX
7	1	0301445	CONNECTOR
8	1	0303165	HOLDING VALVE
9	2	0400069	SCREW, 1/4"-20 X 2" RD HD SLOTTED
10	2	0400366	NUT, 1/4"-20 HEX
11	1	0300710	CLAMP, CHK VALVE RETAINING, 6-1/2"
12	1	0700238	BRACKET, HOLDING VALVE
13	1	0710438	TUBE, HYD. PIPING, ELEV. CYLINDER
14	1	0300766	MALE BRANCH TEE
15	1	0710437	TUBE, HYD. PIPING, ELEV. CYLINDER
16	2	0300764	MALE ELBOW
17	1	0300761	STRAIGHT ADAPTER
18	2	0302610	HOSE, ELEV. CYLINDER, LOWER
19	1	0300041	CONNECTOR, 8MJ-8MB
20	1	0301445	CONNECTOR, EXTENDED, 8MJ-8MBL
21	1	0303167	HOSE ASSEMBLY, ELEV. CYL., UPPER LEFT
22	1	0302321	ELBOW, 8MJ-8MB45
23	1	0303168	ADAPTER, 8MB-8FP
24	2	0400452	LOCKWASHER, 1/4" HELICAL

BOOM EXTENSION HYDRAULICS

REF. NO.	NO. REQ'D	PART NUMBER	DESCRIPTION
1	1	0300011	VALVE, CONTROL, 4 SPOOL
2	1	0301388	ELBOW
3	1	0302508	ELBOW, EXTENDED
4	1	0301113	HOSE ASSY, 82"
5	1	0301659	HOSE ASSY, 150"
6	2	0300229	ELBOW, 8MJ-8MP90
7	1	0302142	CYLINDER, EXTENSION
8	2	0300113	GREASE FITTING

Section VI - PARTS (cont'd)
PUMP, VALVE & FILTER HYDRAULICS

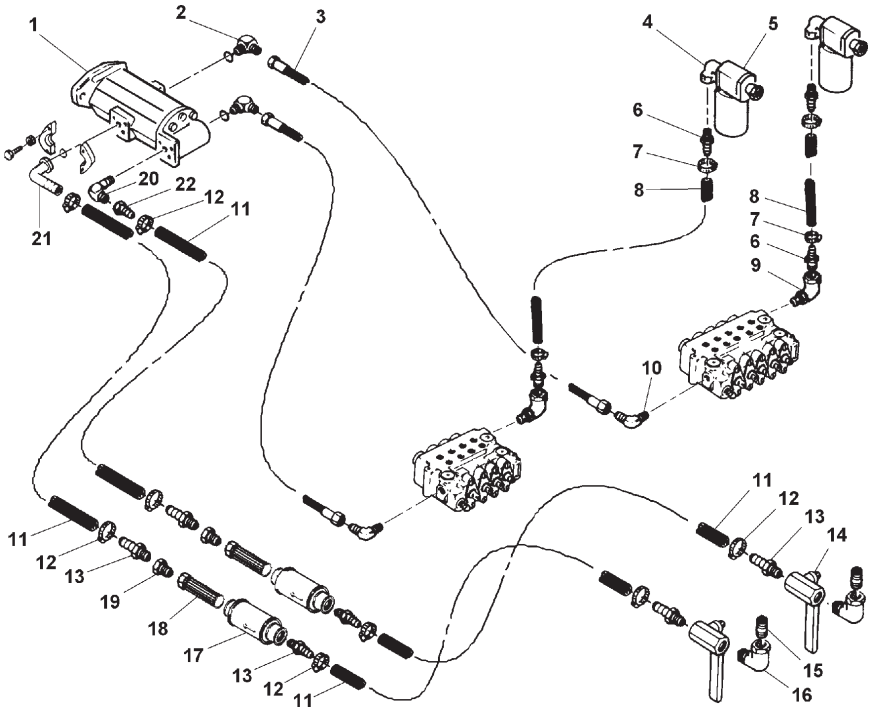

Section VI - PARTS (cont'd)
PUMP, VALVE & FILTER HYDRAULICS

REF. NO.	NO. REQ'D	PART NUMBER	DESCRIPTION
1	1	0301507	PUMP, TP16-150A-2N55
2	2	0301547	ELBOW, 8MJ-12MB90°
3	2	0300165	HOSE ASSY, HI PRESSURE 91"
4	2	0300288	STREET ELBOW, 90°, 1"
	2	0302113	REDUCER, BUSHING, 1"-3/4" (NOT SHOWN)
5	2	5823028	FILTER ASSY, PARKER 40CN103BM25C1C1-1
6	2	0300055	HOSE BARB, 12C4-12MP
7	4	0300071	CLAMP, HOSE 1"
8	2	0301674	HOSE, 3/4" RETURN
9	2	0301375	ELBOW, 12MB-12FP90°
10	2	0300052	ELBOW, 8MJ-10MB90°
11	14 FT.	0300671	SUCTION HOSE, 1-1/2"
12	8	0300364	CLAMP, HOSE, 1" - 2-1/4"
13	7	0300666	HOSE BARB, 24C4-24MP
14	2	0302088	VALVE, BRONZE BALL
15	2	0300891	PIPE NIPPLE, 1-1/2" X 3"
16	2	0300627	STREET ELBOW, 1-1/2" 90°
17	2	5828022	STRAINER HOUSING WELDMENT
18	2	5823017	TANK MTD. STRAINER, LHA#TM-50-100-RV5
19	2	0301373	PIPE BUSHING, 2"NPT-1-1/2"
20	1	0303032	ELBOW, 24MJ-20MB90°
21	1	0302242	FLANGE FITTING
22	1	0303033	HOSE BARB, 24C4-24FJX

Section VI - PARTS (cont'd)
CONTROLS & CROSSRODS

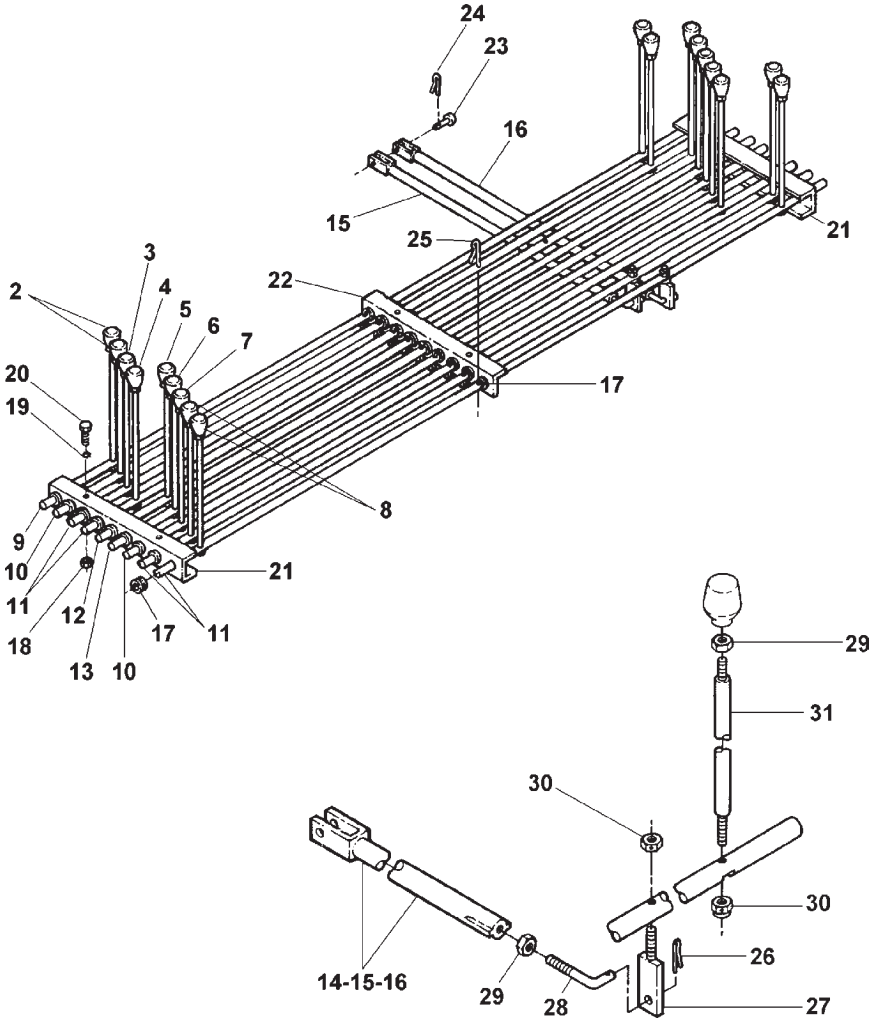

CONTROLS & CROSSRODS

REF. NO.	NO. REQ'D	PART NUMBER	DESCRIPTION
1	1	0300685	VERNIER THROTTLE CONTROL, 20' (NOT SHOWN)
2	4	0300836	KNOB, JACK UP-DOWN
3	2	0300837	KNOB, BOOM EXTEND IN-OUT
4	2	0300835	KNOB, BOOM UP-DOWN
5	2	0302856	KNOB, WHEEL LIFT TILT UP-DOWN
6	2	0302917	KNOB, WHEEL LIFT EXTEND IN-OUT
7	2	0302967	KNOB, WHEEL LIFT LIFT UP-DOWN
8	4	0300834	KNOB, WINCH CABLE IN-OUT
9	1	0705498	CROSS ROD, CONTROL
10	2	0704528	CROSS ROD, WHEEL LIFT
11	4	0704529	CROSS ROD, WRECKER
12	1	0710204	CROSS ROD, TILT
13	1	0704530	CROSS ROD, WHEEL LIFT
14	3	0802023	SHIFTER ROD, SHORT
15	3	0802024	SHIFTER ROD, MEDIUM
16	3	0802025	SHIFTER ROD, LONG
17	27	0300122	GROMMET, SPLIT PLASTIC
18	10	0400370	CLIP, 1/4" "U" TYPE TINNERMAN
19	10	0400452	WASHER, 1/4" HELICAL
20	10	0400060	SCREW, 1/4"-20 X 1/2" HEX HD CAP
21	2	0705495	CHANNEL, CONTROL ROD BEARING
22	1	0705496	ANGLE, CONTROL ROD BEARING
23	9	0400527	PIN, 5/16" X 5/8" CLEVIS COTTERLESS
24	18	0400539	PIN, 3/16" X 1-1/2" COTTER
25	9	0400543	PIN, 1/8" X 3/4" COTTER
26	9	0400541	PIN, 1/16" X 3/4" COTTER
27	9	0800604	ARM, CROSS CONTROL
28	9	0701099	EXTENSION, CONTROL ROD
29	27	0400390	NUT, 3/8"-16 HEX ESLOK JAM
30	18	0400393	NUT, 3/8"-16 HEX JAMLOCK
31	18	0705494	CONTROL LEVER

WINCH ASSEMBLY

WINCH ASSEMBLY

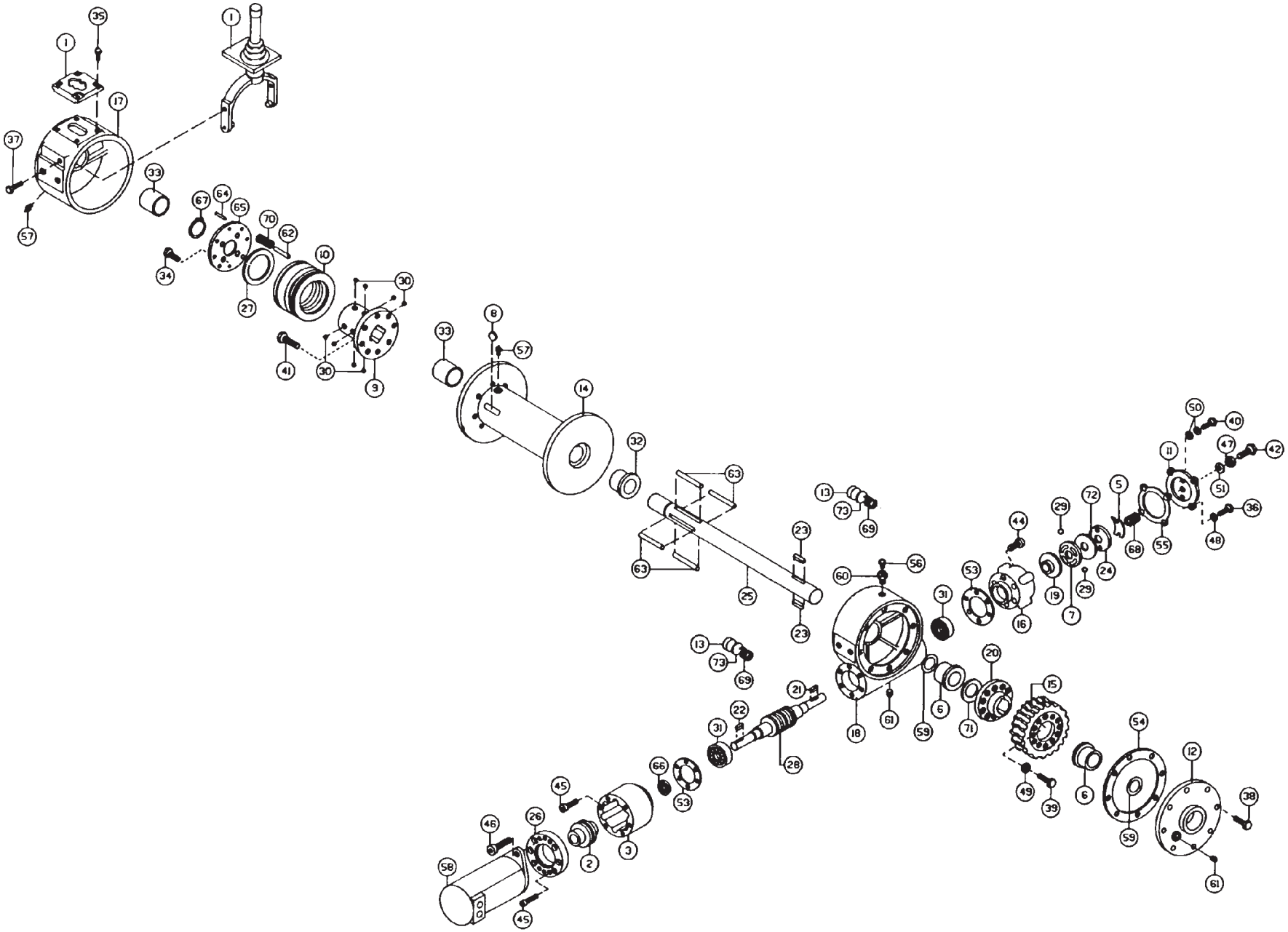

WINCH ASSEMBLY

REF. NO.	NO. REQ'D	PART NUMBER	DESCRIPTION
1	1	276035	SHIFTER ASSEMBLY
2	1	299044	COUPLING, ASSEMBLY
3	1	300047	ADAPTER
5	1	306033	SPRING, FLAT
6	2	308080	BUSHING
7	1	314007	CAM PLATE
8	1	314011	CABLE ANCHOR
9	1	324153	CLUTCH
10	1	324320	LOCKING RING
11	1	328027	COVER, BRAKE
12	1	328123	COVER, GEAR HOUSING
13	2	330010	SHOE, DRAG BRAKE
14	1	332122	DRUM, HX-700
	1	332123	DRUM
15	1	334068	GEAR, R.H.
16	1	338221	HOUSING, BRAKE
17	1	338241	HOUSING, CLUTCH
18	1	338243	HOUSING, GEAR
19	1	340011	HUB, BRAKE
20	1	340069	HUB, GEAR
21	1	342053	KEY
22	1	342092	KEY
23	2	342142	KEY
24	1	352021	PLATE, RETAINER
25	1	357436	SHAFT, DRUM, HX-700
	1	357437	SHAFT, DRUM
26	1	362189	SPACER, ADAPTER PLATE
27	1	362229	SPACER
28	1	368085	WORM, R.H.
29	2	400007	BALL, BRAKE
30	8	400011	BALL, CLUTCH
31	2	402045	BEARING, BALL
32	1	412053	BUSHING
33	2	412054	BUSHING
34	4	414038	CAPSCREW, 1/4-20 X 3/4 HX.HD.
35	4	414069	CAPSCREW, 5/16-18 X 3/4 HX.HD.
36	4	414111	CAPSCREW, 5/16-18 X 1 HX.HD.
37	2	414224	CAPSCREW, 3/8-16 X 1-1/2 HX.HD. ALL-THD

REF. NO.	NO. REQ'D	PART NUMBER	DESCRIPTION
38	8	414277	CAPSCREW, 3/8-16 X 1 HX.HD. NYLOK
39	12	414388	CAPSCREW, 3/8-24 X 1-1/4 HX.HD.
40	2	414399	CAPSCREW, 3/8-24 X 1-1/4 HX.HD. ALL-THD NYLOK
41	8	414571	CAPSCREW, 1/2-20 X 1 HX.HD.
42	1	414603	CAPSCREW, 1/2-20 X 1-3/4 HX.HD. ALL-THD
44	6	414897	CAPSCREW, 3/8-16 X 1 SOC.HD.
45	12	414909	CAPSCREW, 3/8-16 X 1-1/2 SOC.HD. LOC-WEL
46	2	414950	CAPSCREW, 1/2-13 X 1-3/4 SOC.HD. LOC-WEL
47	1	418067	NUT, 1/2-20 HX.JAM
48	4	418163	LOCKWASHER, 5/16 MED.SECT. C.P.
49	12	418176	LOCKWASHER, 3/8 MED.SECT.
50	4	418184	WASHER, 3/8 FLAT ALUM.
51	1	486076	THREAD SEAL
53	2	442192	GASKET
54	1	442193	GASKET
55	1	442194	GASKET
56	1	456008	FITTING, RELIEF
57	2	456031	FITTING, LUBE
58	1	458027	MOTOR, HYDRAULIC
59	2	462021	QUAD, RING
60	1	468002	REDUCER
61	2	468011	PIPE PLUG
62	4	470042	PIN, ROLL
63	4	470044	PIN, DOWEL
64	4	470056	PIN, ROLL
65	1	474031	PLATE, RETAINER
66	1	486068	SEAL, OIL
67	1	490026	RING, RETAINER
68	1	494010	SPRING
69	2	494021	SPRING, DISC
70	4	494069	SPRING
71	1	518017	THRUST WASHER
72	1	530007	DISC, BRAKE
73	2	530094	SPACER, BRAKE

BOOM END SWIVELASSEMBLY

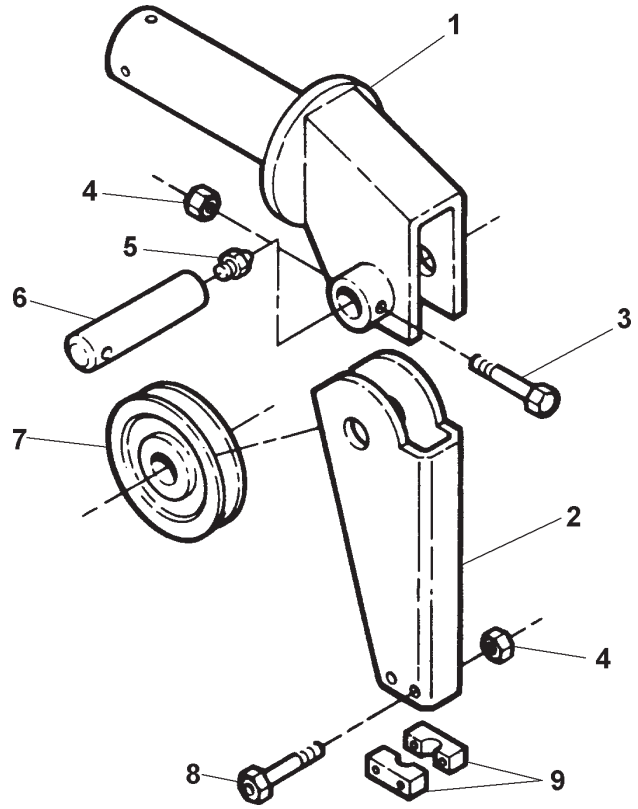

REF. NO.	NO. REQ'D	PART NUMBER	DESCRIPTION
1	1	0800301	SWIVEL WELDMENT, LEFT
	1	0800300	SWIVEL WELDMENT, RIGHT
2	1	0800286	CABLE GUIDE WELDMENT
3	1	0400133	SCREW, 3/8"-16 X 3" HEX HD CAP
4	3	0400392	NUT, 3/8"-16 NYLOK HEX
5	1	0300113	GREASE FITTING
6	1	0700888	SHAFT, SHEAVE
7	1	0300626	SHEAVE, 8" DIA X 1-1/2" RIM
8	2	0400124	SCREW, 3/8"-16 X 2-1/2" HEX HD CAP
9	2	0700801	CABLE GUIDE, BOTTOM

Section VI - PARTS (cont'd)
HYDRAULIC CYLINDERS - WRECKER

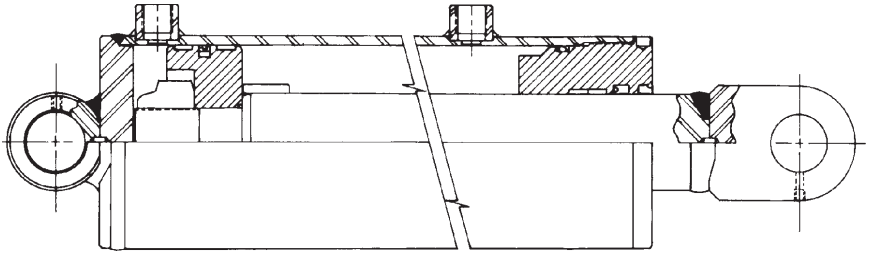

REF. NO.	NO. REQ'D	PART NUMBER	DESCRIPTION
1	1	0302344	CYLINDER, BOOM LIFT (LEFT)
	1	0302345	CYLINDER, BOOM LIFT (RIGHT)
2	1	0304501	SEAL KIT, BOOM LIFT CYLINDER

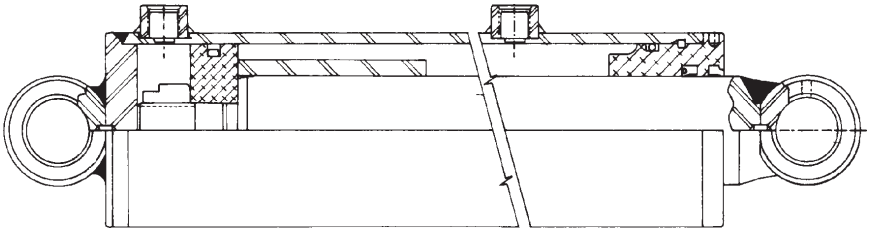

REF. NO.	NO. REQ'D	PART NUMBER	DESCRIPTION
1	1	0302142	CYLINDER, BOOM EXTEND (COMPLETE)
2	1	0304502	SEAL KIT, BOOM EXTEND CYLINDER

Section VI - PARTS (cont'd)
HYDRAULIC CYLINDERS - WHEEL LIFT

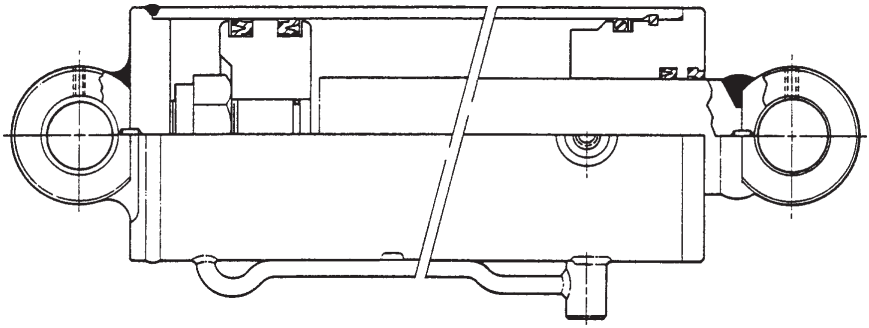

REF. NO.	NO. REQ'D	PART NUMBER	DESCRIPTION
1	2	0303101	CYLINDER, WHEEL LIFT LIFT (COMPLETE)
2	--	0304499	SEAL KIT, WHEEL LIFT LIFT CYLINDER

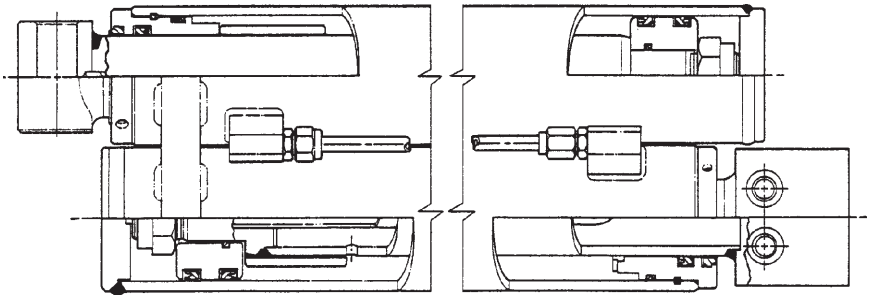

REF. NO.	NO. REQ'D	PART NUMBER	DESCRIPTION
1	1	HD130	CYLINDER, WHEEL LIFT EXTEND (COMPLETE)
2	1	HD163	SEAL KIT, WHEEL LIFT EXTEND CYLINDER

HYDRAULIC CYLINDERS - WHEEL LIFT

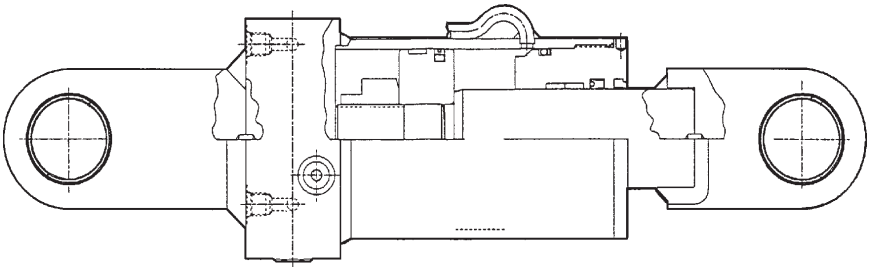

REF. NO.	NO. REQ'D	PART NUMBER	DESCRIPTION
1	1	0303102	CYLINDER, WHEEL LIFT TILT, LEFT
	1	0303103	CYLINDER, WHEEL LIFT TILT, RIGHT
2	--	0304500	SEAL KIT, BOOM LIFT CYLINDER

Section VI - PARTS (cont'd)
REAR JACK HYDRAULICS

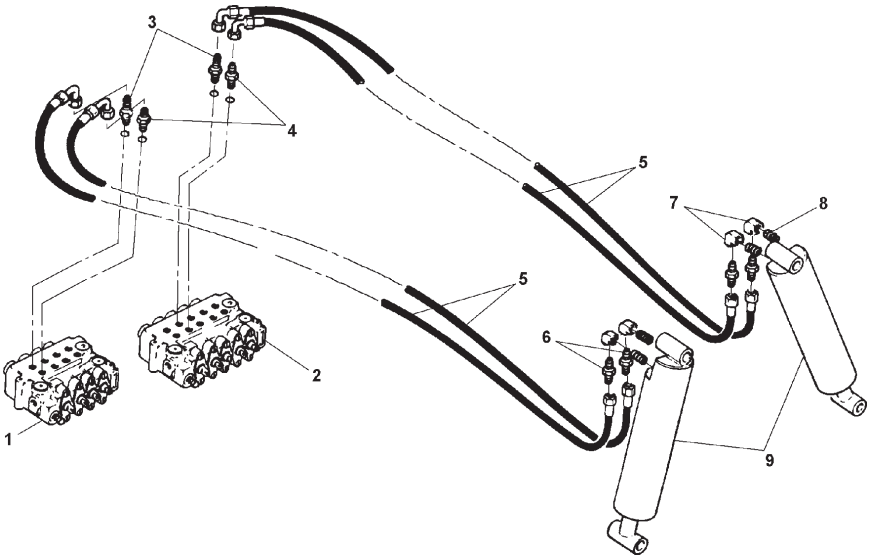

REF. NO.	NO. REQ'D	PART NUMBER	DESCRIPTION
1	1	0300011	VALVE, CONTROL, 4 SPOOL
2	1	0302179	VALVE, CONTROL, 5 SPOOL
3	2	0301445	EXTENDED CONNECTOR, 8MJ-8MBL
4	2	0300041	CONNECTOR, 8MJ-8MB
5	4	0302473	HOSE ASSEMBLY
6	4	0300040	CONNECTOR, 8MJ-8MP
7	4	0301816	FITTING, 8FP-8FP45
8	4	0302032	NIPPLE, BLACK PIPE, 1/2" X 6"
9	2	0300680	CYLINDER, SPADE

Section VI - PARTS (cont'd)
WINCH MOTOR HYDRAULICS

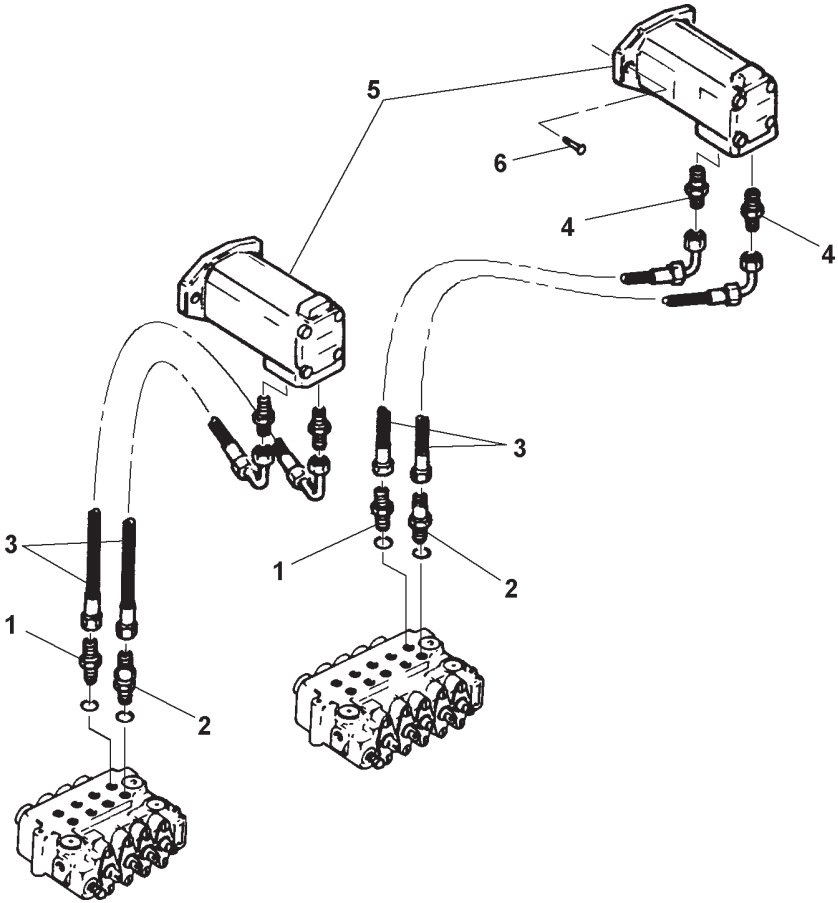

REF. NO.	NO. REQ'D	PART NUMBER	DESCRIPTION
1	2	0300041	CONNECTOR, 8MJ-8MB
2	2	0301445	EXTENDED CONNECTOR, 8MJ-8MBL
3	4	0301207	HOSE ASSEMBLY
4	4	0301376	CONNECTOR, 8MJ-10MB
5	2	0300691	HYD. MOTOR, CHAR-LYNN, #104-1027-005
6	4	0400196	SCREW, 1/2"-13 X 1-1/2" SKT HD CAP
7	4	0400491	LOCKWASHER, 1/2" HELICAL

Section VI - PARTS (cont'd)
LIGHT BAR ASSEMBLY

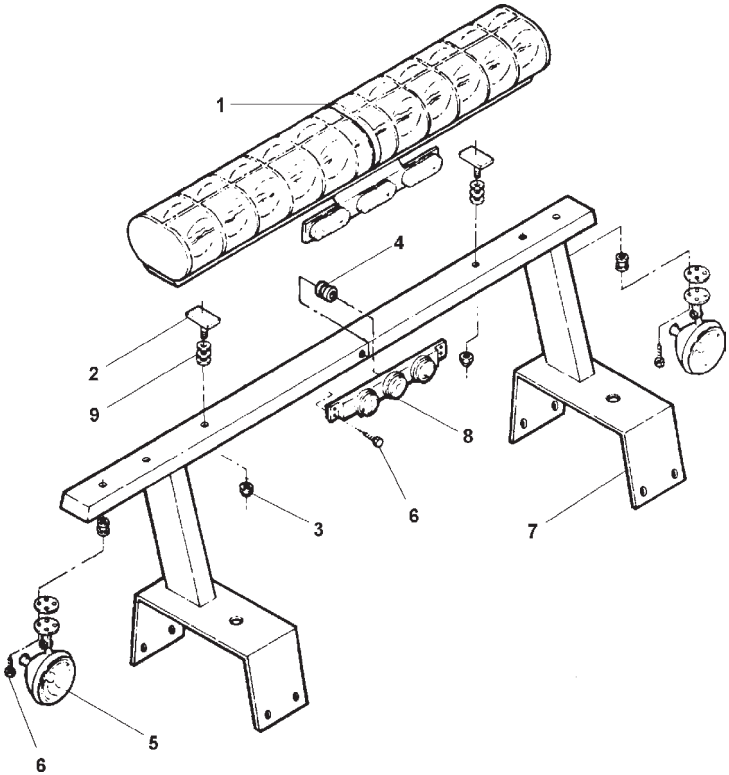

REF. NO.	NO. REQ'D	PART NUMBER	DESCRIPTION
1	1	0301359	WRECKER SPECIAL LIGHT
2	2	0800539	ADAPTER, "T" BOLT
3	2	0400408	NUT, 1/2"-13 HEX NYLOK
4	3	0300117	RUBBER GROMMET
5	2	0300095	SPOTLIGHT W/GASKET
6	12	0400027	SCREW, #8-32 X 5/8" SELF-TAPPING
7	--	124001245	820 LIGHT BAR KIT
	2	0702376	PLATE, SPOTLIGHT MOUNTING
	1	0702381	CROSS CHANNEL
	1	0800766	LEFT SUPPORT TUBE
	1	0800767	RIGHT SUPPORT TUBE
8	1	0300442	LIGHT, 3-BAR
9	6	0400480	WASHER, 1/2" FLAT

LIGHT KIT

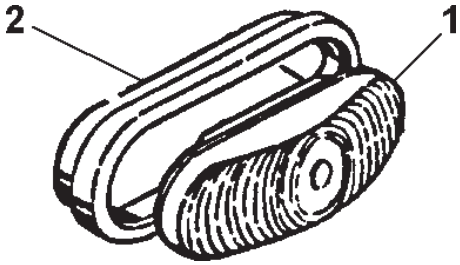

REF. NO.	NO. REQ'D	PART NUMBER	DESCRIPTION
1	2	0303123	LIGHT, SEALED RED (STOP & TURN)
	2	0303177	LIGHT, SEALED AMBER (TURN)
	2	0303124	LIGHT, SEALED CLEAR (BACKUP)
2	6	0303128	TAIL LIGHT GROMMET & PLUG KIT

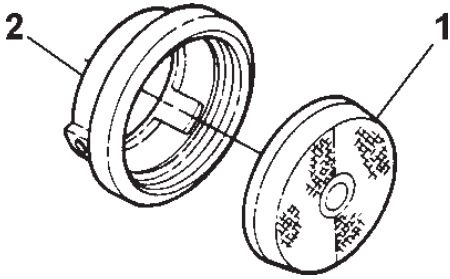

REF. NO.	NO. REQ'D	PART NUMBER	DESCRIPTION
1	4	0303125	MARKER LIGHT, SEALED RED
	2	0303126	MARKER LIGHT, SEALED AMBER
2	6	0303127	GROMMET MOUNTING KIT W/PLUG

LIGHT KIT

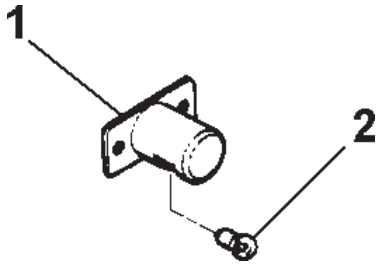

REF. NO.	NO. REQ'D	PART NUMBER	DESCRIPTION
1	1	0300273	LICENSE PLATE ILLUMINATOR
2	1	0300512	BULB, LICENSE PLATE ILLUMINATOR

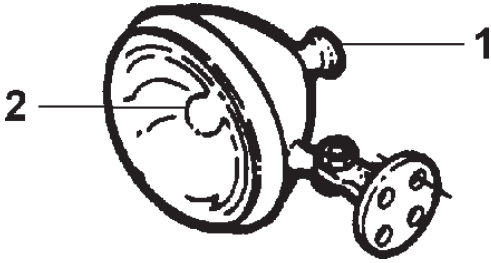

REF. NO.	NO. REQ'D	PART NUMBER	DESCRIPTION
1	2	0300095	SPOTLIGHT (COMPLETE)
2	2	0300700	BULB, SPOTLIGHT

Section VI - PARTS (cont'd)
LIGHT KIT

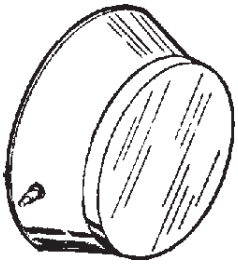

REF. NO.	NO. REQ'D	PART NUMBER	DESCRIPTION
1	4	0302544	DOME LIGHT, M390S (COMPLETE)

Section VI - PARTS (cont'd)
GLAD HAND ASSEMBLY

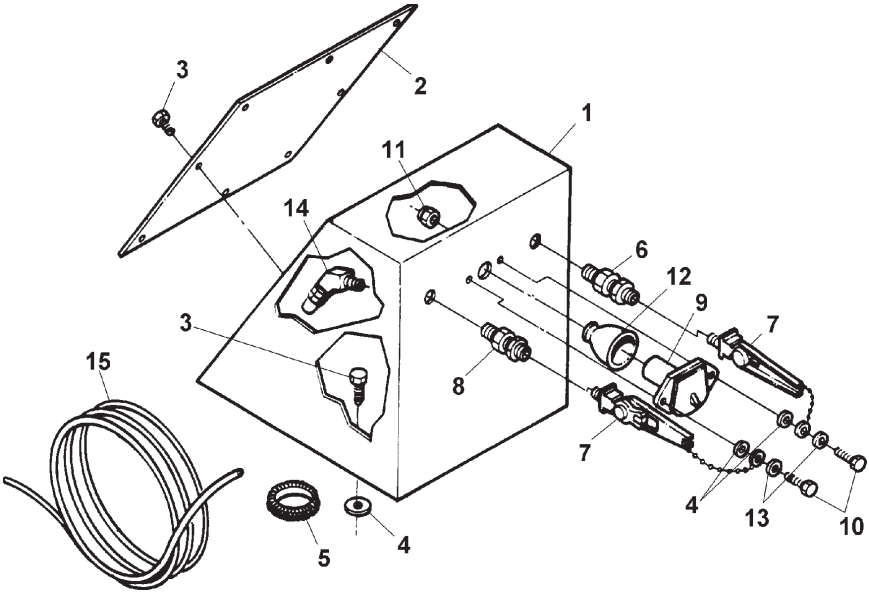

REF. NO.	NO. REQ'D	PART NUMBER	DESCRIPTION
- -	- -	1100441	CONTROL HOUSING, COMPLETE
- -	- -	0900973	HOUSING ASSEMBLY, GLAD HAND
1	1	0801099	HOUSING, WELDED GLAD HAND
2	1	0703797	LID, HOUSING, WELDED
3	9	0400062	SCREW, 1/4"-20 X 3/4" HEX HD SELF-TAP.
4	4	0400451	FLATWASHER, 1/4"
5	1	0301862	CATERPILLER GROMMET
6	2	0301944	GLAD HAND COUPLING
7	2	0301945	GLAD HAND PLUG
8	2	0301946	CONNECTOR
9	1	0301948	HD 7-WAY TRAILER CONNECTOR
10	2	0400070	SCREW, 1/4"-20 X 1" HEX HEAD CAP
11	2	0400367	NUT, 1/4"-20 NYLOK HEX
12	1	0301909	RECEPTACLE BOOT
13	2	0400463	FLATWASHER, 5/16"
14	2	0301947	ADAPTER, 1/4" NPTM X 3/8" SYN. HOSE
15	2	0703795	HOSE, 3/8" X 4" LG SYN.

Section VI - PARTS (cont'd)
HEAVY DUTY TRUCK HITCH

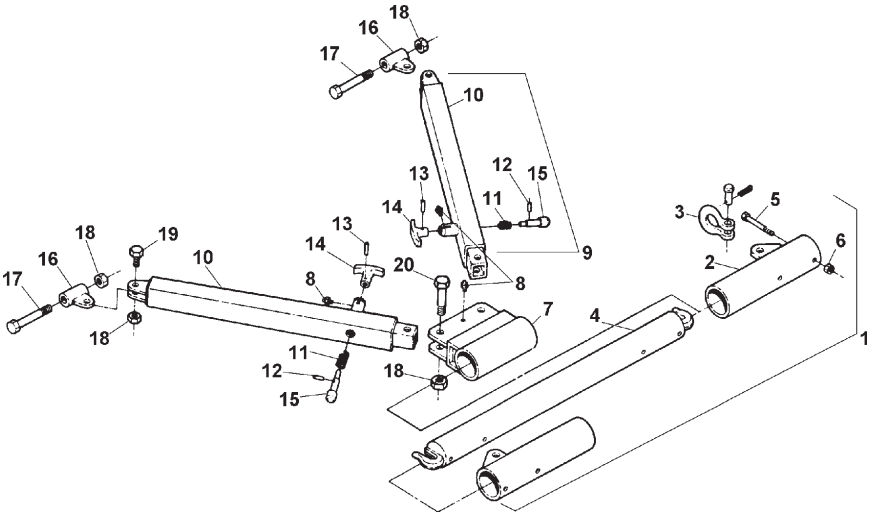

REF. NO.	NO. REQ'D	PART NUMBER	DESCRIPTION
--	--	124001041	ASSEMBLY, HEAVY DUTY TRUCK HITCH
1	1	0900100	ASSEMBLY,ANCHOR BAR
			(INCLUDES ITEMS 2 THRU 8)
2	2	0800409	LIFTER SLEEVE WELDMENT
3	2	0300335	SHACKLE
4	1	0800182	ANCHOR BAR WELDMENT
5	4	0400190	SCREW, 1/2"-13 X 6-1/2" HEX HEAD CAP
6	4	0400408	NUT, 1/2"-13 NYLOK HEX
7	1	0800181	SWIVEL WELDMENT
8	3	0300113	GREASE FITTING
			(INCLUDES ITEMS 8 & 10 THRU 15)
9	2	0900187	SPACER BAR ASSEMBLY
10	2	0800343	SPACER BAR WELDMENT
11	2	0300004	SPRING, PLUNGER
12	2	0400563	ROLL PIN, 3/16" X 1-3/4"
13	2	0400561	ROLL PIN, 5/32" X 3/4"
14	2	0300331	HANDLE, TEE
15	2	0700526	PIN, PLUNGER
16	2	0800171	TRUNNION WELDMENT
17	2	0400324	SCREW, 1"-8 X 7-1/2" HEX HEAD CAP
18	6	0400444	NUT, 1"-8 NYLOK HEX
19	2	0400332	SCREW, 1"-8 X 3-1/2" HEX HEAD CAP
20	2	0400331	SCREW, 1"-8 X 5-1/2" HEX HEAD CAP
21	2	0301205	CHAIN ASSEMBLY (NOT ILLUSTRATED)

Section VI - PARTS (cont'd)
AIR OPERATED FREE SPOOL CLUTCH

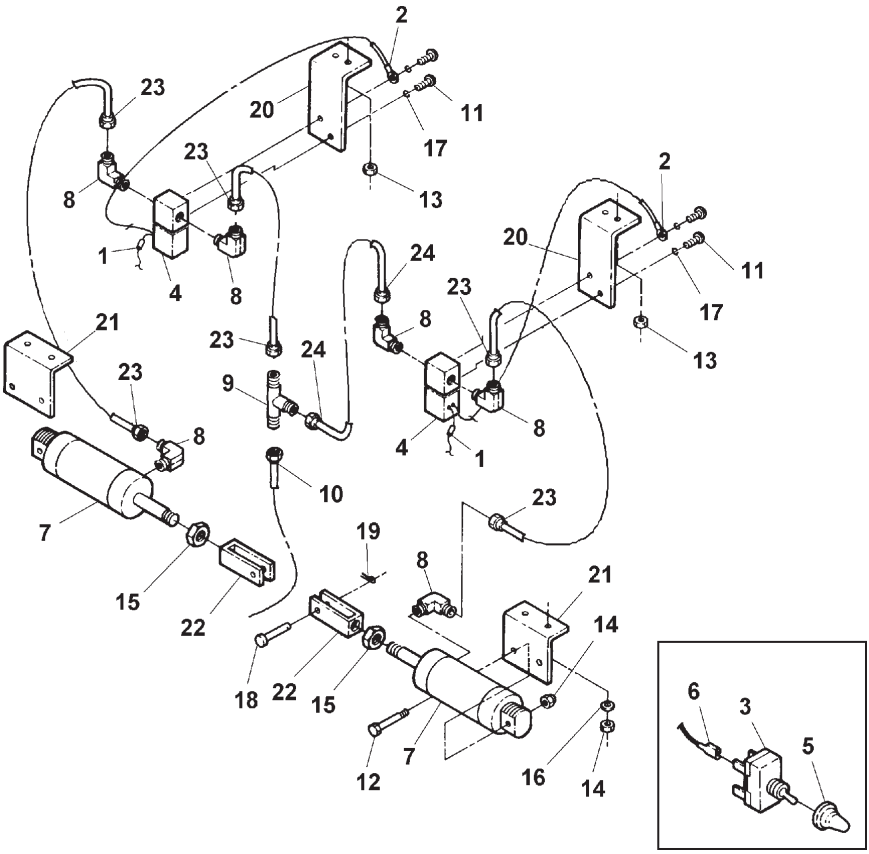

Section VI - PARTS (cont'd)
AIR OPERATED FREE SPOOL CLUTCH

REF. NO.	NO. REQ'D	PART NUMBER	DESCRIPTION
1	2	0300153	BUTT SPLICE
2	2	0301503	GROUND, 5/16" RING CONNECTOR
3	4	0300602	TOGGLE SWITCH
4	2	0300324	SOLENOID VALVE
5	4	0301454	SWITCH BOOT
6	8	0301476	CONNECTOR, 1/4" FEMALE BLADE
7	2	0302055	AIR CYLINDER
8	5	0301574	ELBOW
9	1	0301575	TEE
10	1	0702399	AIR LINE (144")
11	4	0400041	SCREW, #10-32 X 3/8" PAN HD
12	2	0400131	SCREW, 3/8"-16 X 1-3/4" HEX HD CAP
13	4	0400367	NUT, 1/4"-20 LOCK
14	6	0400392	NUT, 3/8"-16 LOCK
15	2	0400412	NUT, 1/2"-20 HEX JAM
16	4	0400480	FLAT WASHER, 3/8"
17	4	0400520	LOCKWASHER, #10
18	2	0400530	CLEVIS PIN, 5/16" X 1-1/4"
19	2	0400543	COTTER PIN, 1/8" X 3/4"
20	2	0701078	BRACKET
21	2	0702382	MOUNTING ANGLE
22	2	0800772	ADJUSTING YOKE
23	3	0702397	AIR LINE (12")
24	1	0702398	AIR LINE (24")

Section VI - PARTS (cont'd)
KING PIN ASSEMBLY

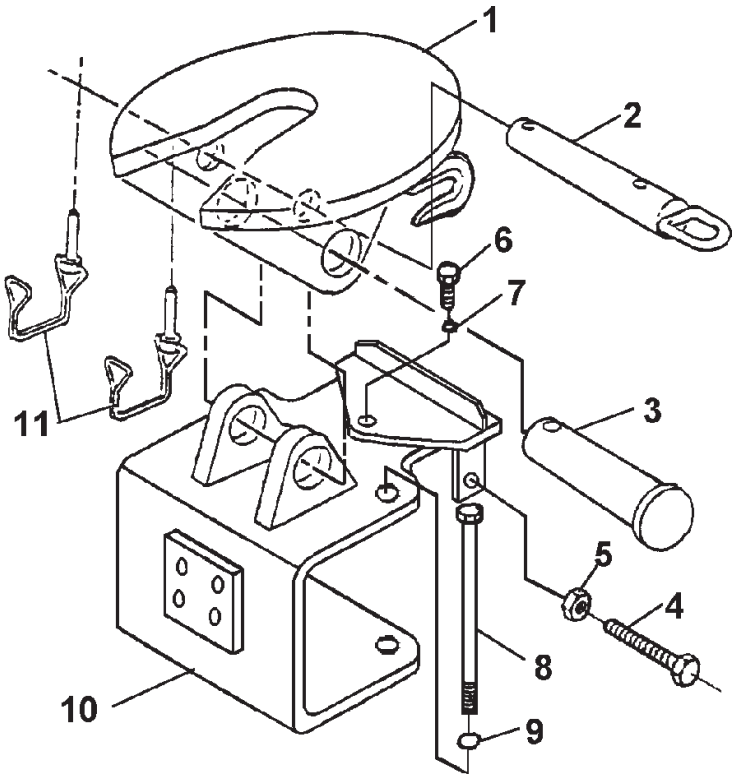

REF. NO.	NO. REQ'D	PART NUMBER	DESCRIPTION
1	1	VA0660	5TH WHEEL PIVOT PLATE WELDMENT
2	1	VA0661	PULL PIN WELDMENT
3	1	VA0662	PIVOT PIN WELDMENT
4	2	0400282	SCREW, 3/4"-10 X 2-3/4" HEX HD CAP
5	2	0400440	NUT, 3/4"-10 HEX JAM
6	1	0400188	SCREW, 1/2"-13 X 2" HEX HD CAP
7	1	0400491	LOCKWASHER, 1/2" HELICAL
8	2	0400316	SCREW, 7/8"-9 X 8" HEX HD CAP
9	2	0400515	LOCKWASHER, 7/8" HELICAL
10	1	0802962	LOCK PLATE WELDMENT
11	2	HD1259	PIN, SNAPPER

Section VII - INSTALLATION

This Section provides to those owners who have chosen to mount the unit to a truck chassis, the necessary information to safely and properly install the unit on the most popular domestic and foreign truck models.

Read and follow these instructions in the sequence as written to ensure safety and proper installation and avoid damage to the unit and/or personnel.

7.1 CHASSIS PREPARATION

(a) Remove any cross members, fuel tanks or other equipment that may be mounted in the chassis frame behind the rear axle.

(b) Measure from the center between frame rails to the outside of frame rails. Any chassis equipment such as battery boxes, fuel tanks or air tanks **MUST NOT EXTEND BEYOND 25"** from center of frame. It may be necessary to relocate such equipment for proper installation of the unit.

NOTE
SOME EQUIPMENT MAY NOT BE FEASIBLE TO MOVE. THEREFORE, THE TOOL COMPARTMENT OF THE UNIT WILL REQUIRE MODIFICATION FOR PROPER INSTALLATION.

(c) Check clearance between brake canisters mounted behind rear axle. There should be a minimum of 28" between canisters to allow for installation, proper operation and easy maintenance of the wheel lift.

NOTE
A CLEARANCE OF LESS THAN 28" BETWEEN CANISTERS MAY INTERFERE WITH OPERATION AND MAINTENANCE OF THE WHEEL LIFT. FURTHERMORE, INSTALLATION OF THE WHEEL LIFT MAY BE IMPOSSIBLE.

Section VII - INSTALLATION (cont'd)

7.1 CHASSIS PREPARATION (cont'd)

(d) Locate chassis wiring harness behind cab that contains the Right Turn/Stop, Backup and Tail Light wires. Measure long enough to reach the wrecker body junction box and add approximately 24" for slack and cut.

NOTE
JAPANESE TRUCK CHASSIS' HOUSE A SEPARATE WIRE FOR THE STOP LIGHTS WHICH REQUIRES THE USE OF A CONVERTER, PART NUMBER 0302174.

7.2 POWER TAKE-OFF (PTO) INSTALLATION

(a) Install PTO Control Cable (knob end) into Switch Panel. Route cable down to transmission.

NOTE
MAKE CERTAIN CABLE IS NOT PINCHED OR CRIMPED AT ANY POINT AND THAT CABLE DOES NOT INTERFERE WITH TRUCK COMPONENTS.

(b) Drain transmission oil.

(c) Install PTO according to the instructions found with PTO.

(d) Mount Control Cable to PTO.

(e) Install Fittings for Suction Line and Pressure Lines to Pump. Install Suction Line with Clamps provided. See Figure 7.1.

7.2 POWER TAKE-OFF (PTO) INSTALLATION (cont'd)

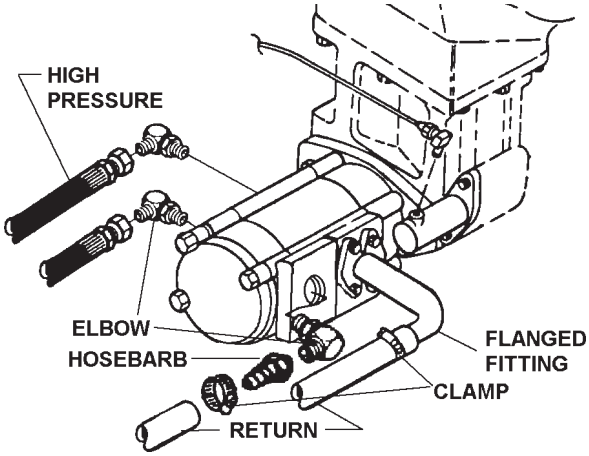

FIGURE 7.1

CAUTION

BE CERTAIN TO REFILL TRANSMISSION WITH REQUIRED LUBRICANT

7.3 BODY PREPARATION

(a) Prepare and install wiring harnesses according to wiring schematic contained in the rear of this manual.

(b) Install rubber fenderettes to body.

(c) Install any Optional Equipment to truck and body.

7.4 CHASSIS FRAME PREPARATION

(a) Measure from Center Line of Axle back 36-1/2" and mark top of frame rail using a scribe.

7.4 CHASSIS FRAME PREPARATION (cont'd)

(b) On vehicle leg of frame rails, scribe a 15° line from the 36-1/2" mark. See Figure 7.2.

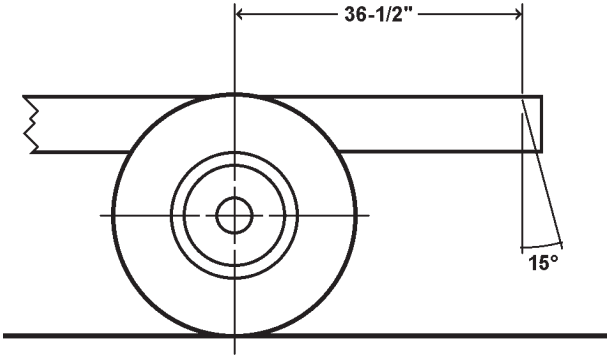

FIGURE 7.2

NOTE
CHECK MEASUREMENTS AND MAKE CERTAIN THAT CUT WILL MISS SPRING BRACKETS AND ANY OTHER NECESSARY COMPONENTS.

(c) Cut frame rails according to measurements obtained in steps (a) and (b). Refer to Figure 7.2.

(d) Measure 20" from center line of axle towards cab and mark.See Figure 7.3.

7.4 CHASSIS FRAME PREPARATION (cont'd)

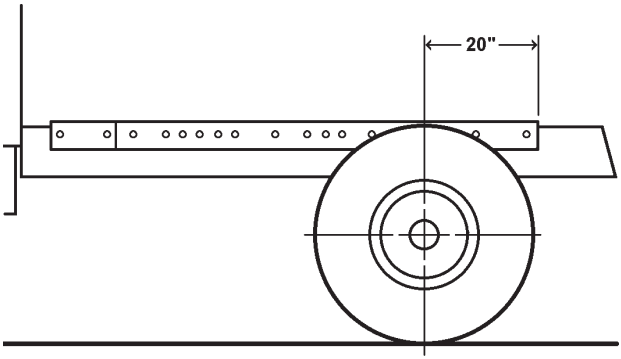

FIGURE 7.3

(e) Position mounting angles in line with mark and flush with top of frame rails.

CAUTION

DO NOT WELD ANGLES TO FRAME RAILS!
D.O.T. REGULATIONS PROHIBIT ANY WELDING TO CHASSIS FRAME.

NOTE
IT MAY BE NECESSARY TO NOTCH THE MOUNTING ANGLES TO CLEAR SPRING HANGERS AND OTHER UNMOVABLE OBJECTS.

7.4 CHASSIS FRAME PREPARATION (cont'd)

CAUTION

**DO NOT CUT HORIZONTAL LEG OF ANGLES!
IF NOTCHING IS REQUIRED, DO NOT CUT ANY CLOSER THAN WITHIN 1/2" OF MOUNTING HOLES. REDRILL MOUNTING HOLES IF NECESSARY 1-1/8" FROM CENTER LINE OF OLD HOLE.**

(f) After modifications are completed, securely clamp the mounting angles to the chassis frame. Refer to Figure 7.3.

(g) Using existing holes in mounting angles as a template, drill seventeen (17) 29/32" holes through frame rails.

(h) Mount angles to frame with 7/8" dia. bolts and locknuts provided.

NOTE
NEVER USE LESS THAN SEVENTEEN (17) MOUNTING BOLTS TO SECURE MOUNTING ANGLES!

(k) Clamp tailgate mounting angles to frame rails with predrilled holes to frame rails and flush with the 15° cut. Using the predrilled holes as a template, drill three (3) 29/32" holes in frame rails and secure angles with 7/8" dia. bolts and lock nuts to frame rails. See Figure 7.4.

7.4 CHASSIS FRAME PREPARATION (cont'd)

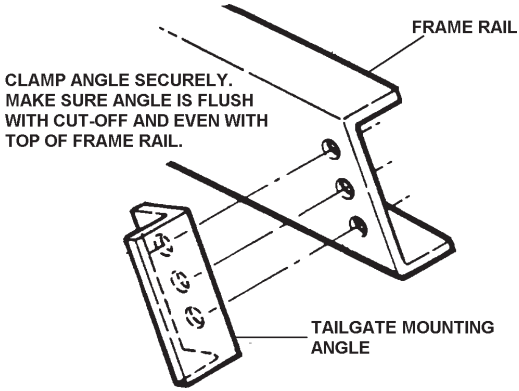

FIGURE 7.4

CAUTION

**DO NOT WELD ANGLES TO FRAME RAILS!
D.O.T. REGULATIONS PROHIBIT ANY WELDING
TO CHASSIS FRAME.**

7.5 MOUNTING WRECKER BODY TO CHASSIS

(a) Using a suitable lifting device, carefully position the body onto and centered with chassis frame.

(b) Check positioning and alignment carefully, reposition as necessary, centering the wheels on the wrecker wheel center.

(c) Secure all wiring, hoses and cables away from mounting angles. Weld the wrecker body sill angles to the front, rear and tailgate mounting angles.

7.5 MOUNTING WRECKER BODY TO CHASSIS (cont'd)

NOTE
WELDS SHOULD BE 1/4"- 3/8" HEAVY WELDS. 6" WELDS ON 9" CENTERS WHERE THE SILL ANGLES JOIN THE MOUNTING ANGLES. WELDS SHOULD BE SOLID UNDER THE WRECKER FRAME AREA AND ALSO AROUND THE TAILGATE MOUNTING ANGLES.

(d) Connect chassis wiring harness to junction box of the body.

(e) Complete any other wiring such as switch sanel, etc.

7.6 HYDRAULIC HOOK UP

(a) Install suction line fittings to bottom of hydraulic reservoir. Install suction lines to fittings using clamps provided.

(b) Install suction hose to pump.

(c) Install high pressure lines from valves to pump.

NOTE
ALL NECESSARY FITTINGS, HOSES AND HIGH PRESSURE HOSE EXTENSIONS ARE PROVIDED.

NOTE
A HYDRAULIC SCHEMATIC OF THE WRECKER/ WHEEL LIFT IS PROVIDED IN THE BACK OF THIS MANUAL.

(d) Fill hydraulic reservoir to level with proper hydraulic fluid. Refer to Section V - MAINTENANCE for recommended fluids.

(e) Check all other fluids (winches and grease fittings) and fill to proper levels according to specifications found in Section V - MAINTENANCE for recommended fluids.

7.7 FINAL INSPECTION & RUN-IN

(a) Inspect all components for proper installation.

(b) Inspect all hydraulic lines and fittings for tightness. Tighten if necessary.

(c) Start engine, engage PTO and run all systems to remove all air from hydraulic system.

(d) Check and refill if necessary to proper fill level.

(e) Install any equipment such as mud flaps and trim accessories.

7.8 OPTIONAL TUNNEL TOOL BOX INSTALLATION

(a) Using a suitable lifting device, position the bolt-on box, lining up the bottom bend with the bottom bend of the body's front box.

(b) Clamp the bolt-on box to the body's front box.

(c) Position the mounting angles with the short leg against bottom of box and long leg against chassis frame rail.

(d) Clamp mounting angles to chassis frame. Weld angles to bottom of box.

(e) Drill 21/32" holes through frame and secure bolt-on box with 5/8" dia. bolts and lock nuts provided.

NOTES

Section VIII - SCHEMATICS
ELECTRICAL

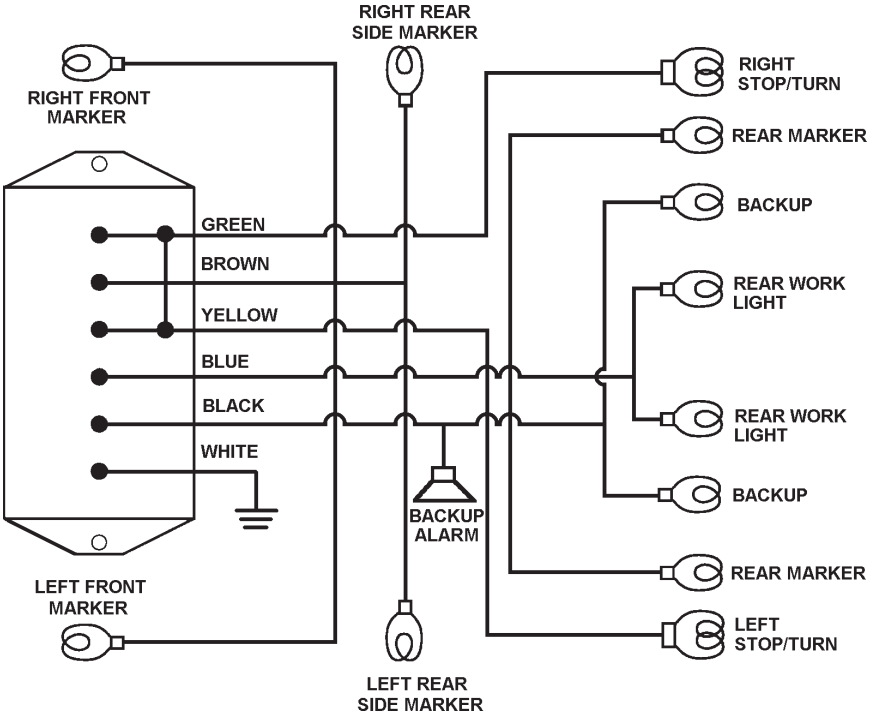

Section VIII - SCHEMATICS (cont'd)
HYDRAULIC

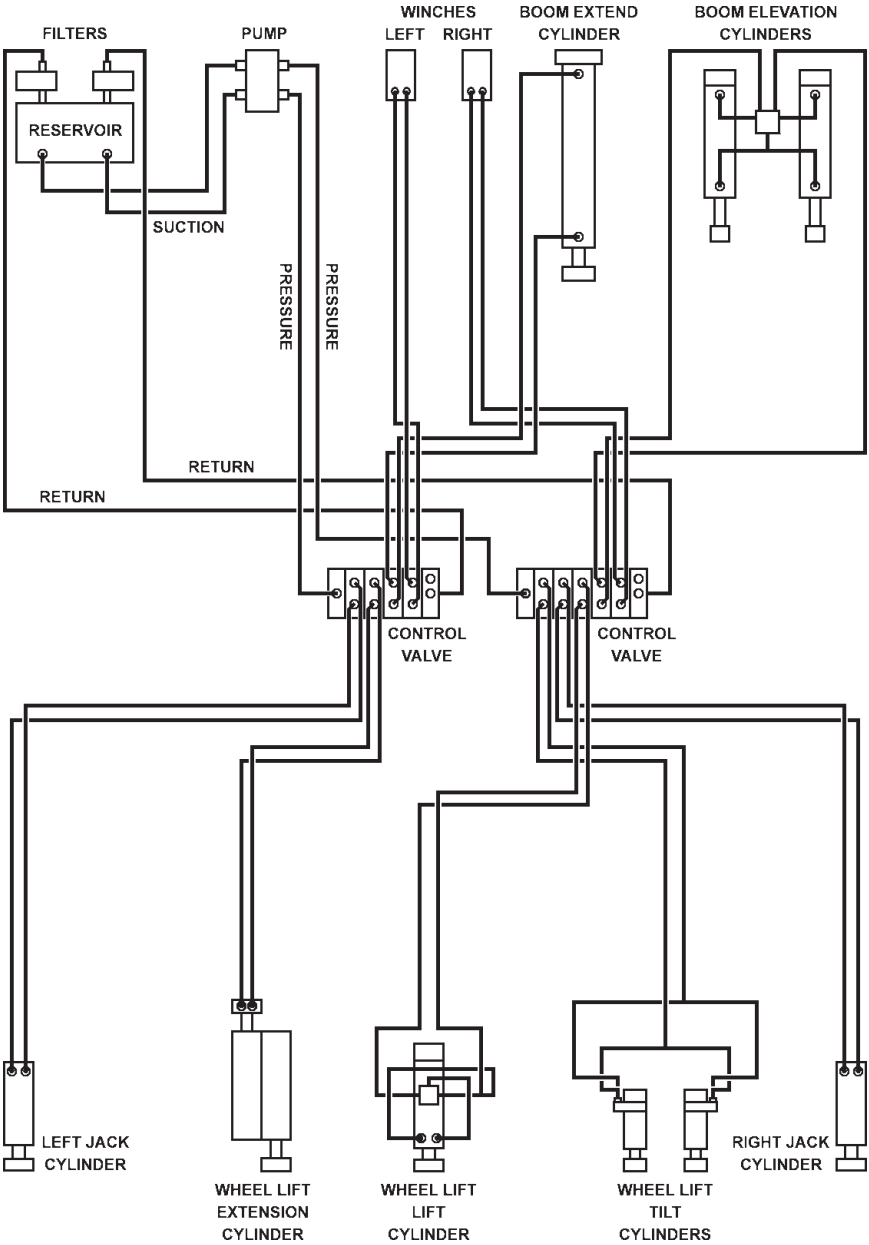

NOTES

CENTURY®
Miller Industries Towing Equipment Inc.
8503 Hilltop Drive • Ooltewah, Tennessee 37363 • (423) 238-4171
www.millerind.com